AE

WE PROVIDE THE POWER

SQ-SERIES

SQ10000 INSTALL & MAINTENANCE MANUAL

TABLE OF CONTENTS

SAFETY 3

INTRODUCTION 6

MODEL IDENTIFICATION	6
SPECIFICATIONS	8
PACKAGE CONTENTS	9
LOCATION OF IMPORTANT COMPONENTS AND CONNECTIONS	10
FUEL RECOMMENDATIONS	12
ENGINE OIL RECOMMENDATIONS	12
STARTING BATTERIES	13
OPERATOR INTERFACE	13

INSTALLATION 14

MOUNTING THE GENSET	15
FUEL TANK INSTALLATION	16
HIGH VOLTAGE ELECTRICAL CONNECTIONS	17
AC WIRING TERMINATION	17
AUXILIARY WARNING, SHUTDOWN, AND EMERGENCY STOP WIRING	18
AUTO MODE REMOTE START SETUP	19
CONNECTING THE BATTERY	19

OPERATION 19

PRE-START CHECKS	20
PRIMING THE FUEL SYSTEM	20
STARTING THE GENSET	20
STOPPING THE GENSET	23
OPERATING AT HIGH ALTITUDES	23
OPERATING IN HOT AMBIENT TEMPERATURES	23

OPERATING IN COLD AMBIENT TEMPERATURES	24
OPERATING IN DIRTY ENVIRONMENTS	24
BREAKING IN A NEW ENGINE	24

STORAGE AND RETURNING TO SERVICE 25
MAINTENANCE 26
TROUBLESHOOTING/ FAULT ICONS 27
SUPPORTING DOCUMENTS 31

APPENDIX A: DC WIRING SCHEMATIC	32
APPENDIX B: AC WIRING SCHEMATIC (SINGLE PHASE)	33
APPENDIX B: AC WIRING SCHEMATIC (3 PHASE)	34

SAFETY

Thoroughly read this manual before operating the genset. The following symbols are used throughout this manual and on the genset to warn of the potential hazards to the operator, service personnel, or equipment.

DANGER	Alerts you to an immediate hazard that will result in severe personal injury or death.
WARNING	Alerts you to a hazard or unsafe practice that can result in severe personal injury or death.
CAUTION	Alerts you to a hazard or unsafe practice that can result in personal injury or equipment damage.

When using the AUTO starting feature, electric shock and moving parts hazards are possible due to unexpected starting. Make sure that the genset is not in AUTO mode whenever performing maintenance or service or when the genset is stored.

*****All operators, no matter how knowledgeable, should read this and related manuals before operating the engine or any attached equipment. It is the owner's responsibility to instruct all operators in safe operation. Be sure to observe the following warnings for safe operation.*****

EXHAUST GAS IS DEADLY

- Engine exhaust fumes can be very harmful if allowed to accumulate. Only operate the engine in a well-ventilated area.
- Inspect for exhaust leaks at every startup and after every eight hours of operation.
- Exposure to exhaust gases can cause carbon monoxide poisoning.
- Engine cooling air must not be used for heating working or living spaces or compartments.
- Disable any automatic starting systems before storing the genset in a confined area.

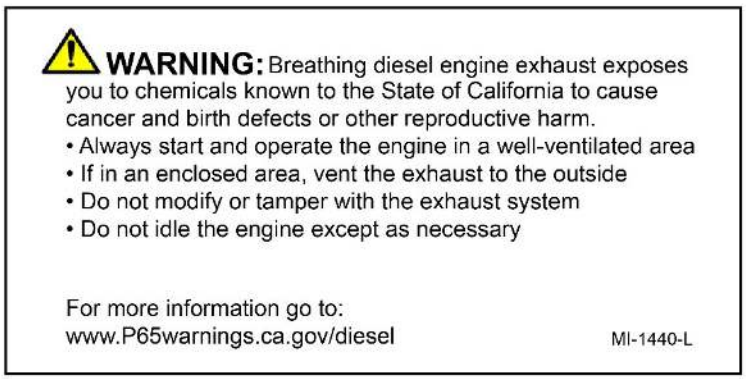

EXHAUST GAS IS DEADLY

- Diesel fuel is combustible. Do not smoke or make/break electrical connections when diesel fumes are present.
- Keep flames, sparks, pilot lights, and arc-producing equipment and all other sources of ignition well away from engine fuel.
- Fuel lines must be secured, free of leaks and separated or shielded from electrical wiring.

GENERATOR VOLTAGE IS DEADLY

- Disable any automatic starting systems before performing inspections or service on the genset to avoid electric shock from unexpected start.
- Generator electrical output connections must be made by a trained and experienced electrician in accordance with applicable codes.
- The genset must not be connected to the public power utility or any other source of electrical power. Back-feed could lead to electrocution of utility personnel and/or damage equipment. An approved switching device must be used to prevent interconnections.
- Use caution when working with live electrical equipment. Remove jewelry, wear tight fitting clothing, and only use insulated tools.
- Electric shock can be deadly. Always insulate yourself from ground and never operate the genset when wet.

MOVING PARTS CAN CAUSE SEVERE PERSONAL INJURY OR DEATH

- Disable any automatic starting systems before performing inspections or service on the genset to avoid unexpected start.
- Do not wear loose clothing or jewelry near moving parts such as fans, belts and pulleys.
- Keep hands away from moving parts.

BATTERY GAS IS EXPLOSIVE

- Wear safety glasses.
- Do not smoke near battery.
- To reduce arcing when disconnecting or reconnecting battery cables, always disconnect the negative (-) battery cable first and reconnect it last.

FLAMMABLE VAPOR CAN CAUSE AN ENGINE TO OVERSPEED

- Flammable vapor can cause an engine to over speed and become difficult to stop, resulting in possible fire, explosion, severe personal injury and death.
- Do not operate gensets where a flammable vapor environment can be created by fuel spill or leak.

GENERAL CAUTIONS

- Exhaust gas can be extremely hot. Do not point toward people. Keep machine more than 1 meter (3 feet) from flammable materials.
- Check for fuel leaks before each operation.
- Stop the engine before adding fuel to tank (where applicable)
- Anti-freeze coolant contains ethylene glycol, which is toxic to humans and animals. Clean up spills and dispose of used engine coolant in accordance with local regulations.

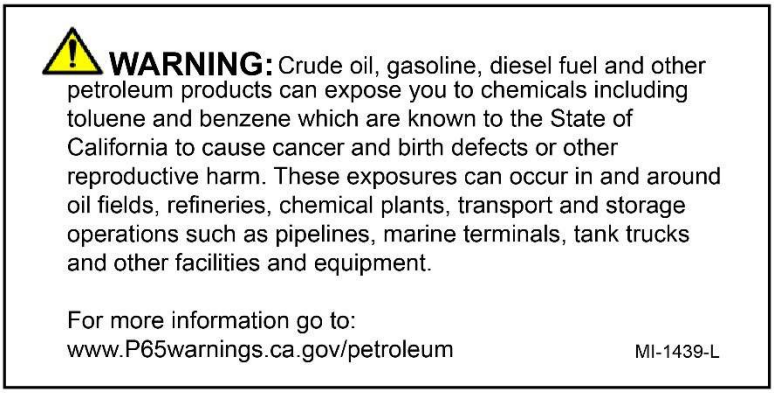

This manual covers the installation, first run operation, and maintenance of the SQ Genset. Be sure to read the entire manual thoroughly before first use and obey all safety warning information contained within. Proper installation and use as described in this manual will ensure your genset operates at peak performance. The owner is responsible for proper installation observing all local electrical and building codes. The owner is also responsible for performing regular maintenance as described in the supplied engine Operator's Manual.

MODEL IDENTIFICATION

GENSET MODEL & SERIAL NUMBER LOCATION

The genset model and serial number can be found on the primary nameplate located on the door side of the enclosure.

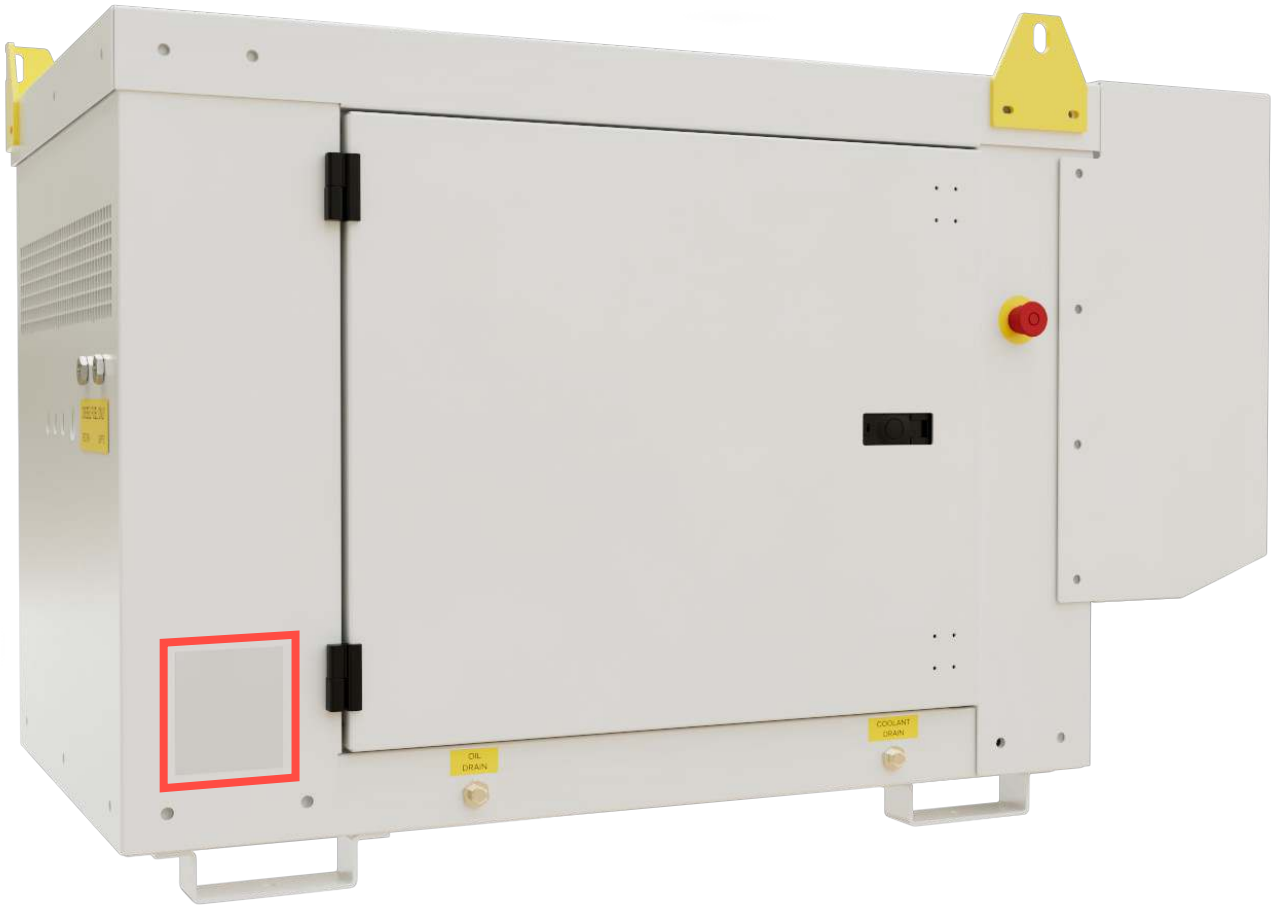

Figure 1: Genset Model and Serial Number

The engine model and serial number can be found either on genset baseframe just inside the genset door, to the right. OR on top of the control panel box.

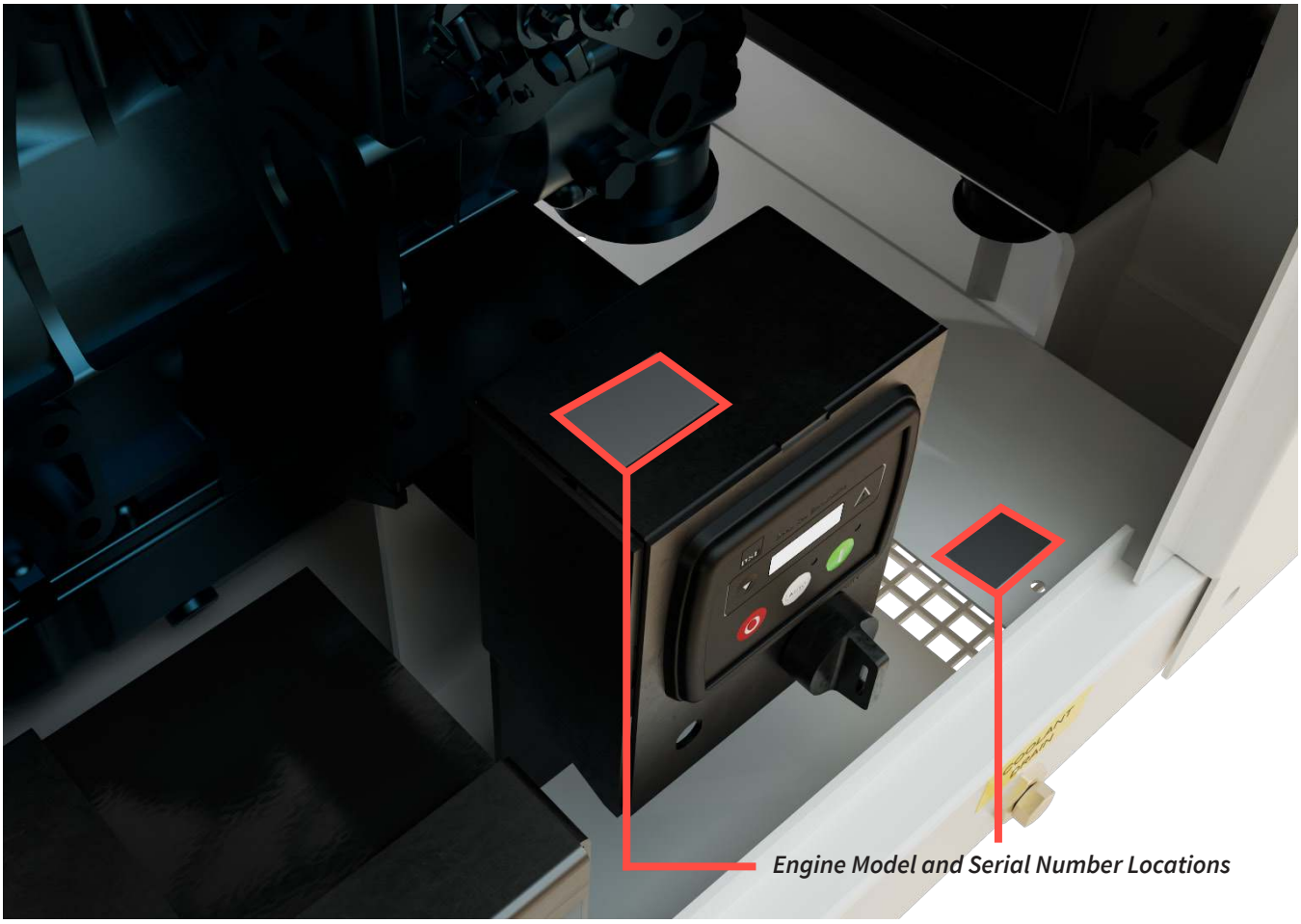

Engine Model and Serial Number Locations

NOTE: You should record the model and serial numbers below for quick reference in the future.

	MODEL #	SERIAL #
GENSET:		
ENGINE:		
GENERATOR:		

SPECIFICATIONS

MODEL	UNIT	SQ9000				SQ10000			
GENERATOR									
Manufacturer	-	Linz							
Model	-	CPT18MF							
Type	-	4-pole, rotating field							
Exciter Type	-	Brushless, self-exciting							
Frequency	Hz	60							
No. Leads	-	12, Reconfigurable							
Rated Voltage	V	120/240	120/208	120/208/240	277/480	120/240	120/208	120/208/240	277/480
Phase	ø	Single	Three	Three Delta	Three	Single	Three	Three Delta	Three
Number of Poles	-	4							
Insulation	Class	H							
Temp. Rise	°C	125							
Voltage Regulation (AVR)	%	1							
Peak Motor Starting kVA @ 20% Transient Voltage Dip	kVA	40		36		40		36	
ENGINE									
Manufacturer	-	Kubota							
Model	-	D1005-E4BG				D1105-E4BG			
EPA Certificate	-	Tier 4 NRTC							
Type	-	Vertical, water-cooled, 4 cycle diesel engine							
Number of cylinders	-	3							
Fuel	-	Ultra Low Sulfur Diesel (15 ppm Sulfur) (ASTM D975)							
Bore x Stroke	in	2.99 x 2.90				3.07 x 3.09			
Displacement	L	1.001				1.123			
Engine Speed	rpm	1800							
Oil Capacity	gal	1.03							
Coolant Capacity	gal	0.82							

MODEL	UNIT	SQ9000			SQ10000		
GENERATOR SET							
Standby Power	kW (kVA)	8.6 (8.6)	8.6 (10.7)		10.0 (10.0)	10.0 (12.5)	
Prime Power	kW (kVA)	7.7 (7.7)	7.7 (9.5)		8.9 (8.9)	8.9 (11.0)	
Governor Type	-	Mechanical					
Fuel Consumption (100% Load)	gal/hr	0.77			0.89		
Fuel Consumption (75% Load)		0.58			0.67		
Fuel Consumption (50% Load)		0.38			0.45		
Fuel Consumption (25% Load)		0.19			0.22		
Main Breaker	Amps	42	35	15	42	35	15
Voltage Sense Fuses	-	2 Amp 3AB Fuse					
Battery	CCA	500					
Starting System	-	12V DC Electric					
L x W x H	in	53.8 x 27.3 x 33.5					
Approx Net Wt.	lbs	925					
Output	-	Distribution Block in Generator Box					
Stop System	-	High Coolant Temperature, Low Oil Pressure, Over Voltage, Under Voltage, Over Frequency					

PACKAGE CONTENTS

Each generator set is shipped with a set of parts and manuals in a ship loose package. This package includes the following:

- Installation Manual
- Kubota Engine Operator's Manual
- Generator Manual
- Genset Door Keys
- Engine Keys
- Neutral-Ground Bonding Cable

LOCATION OF IMPORTANT COMPONENTS AND CONNECTIONS

The location of components needed for operation and maintenance are shown below. For more details see the MAINTENANCE section on page 26.

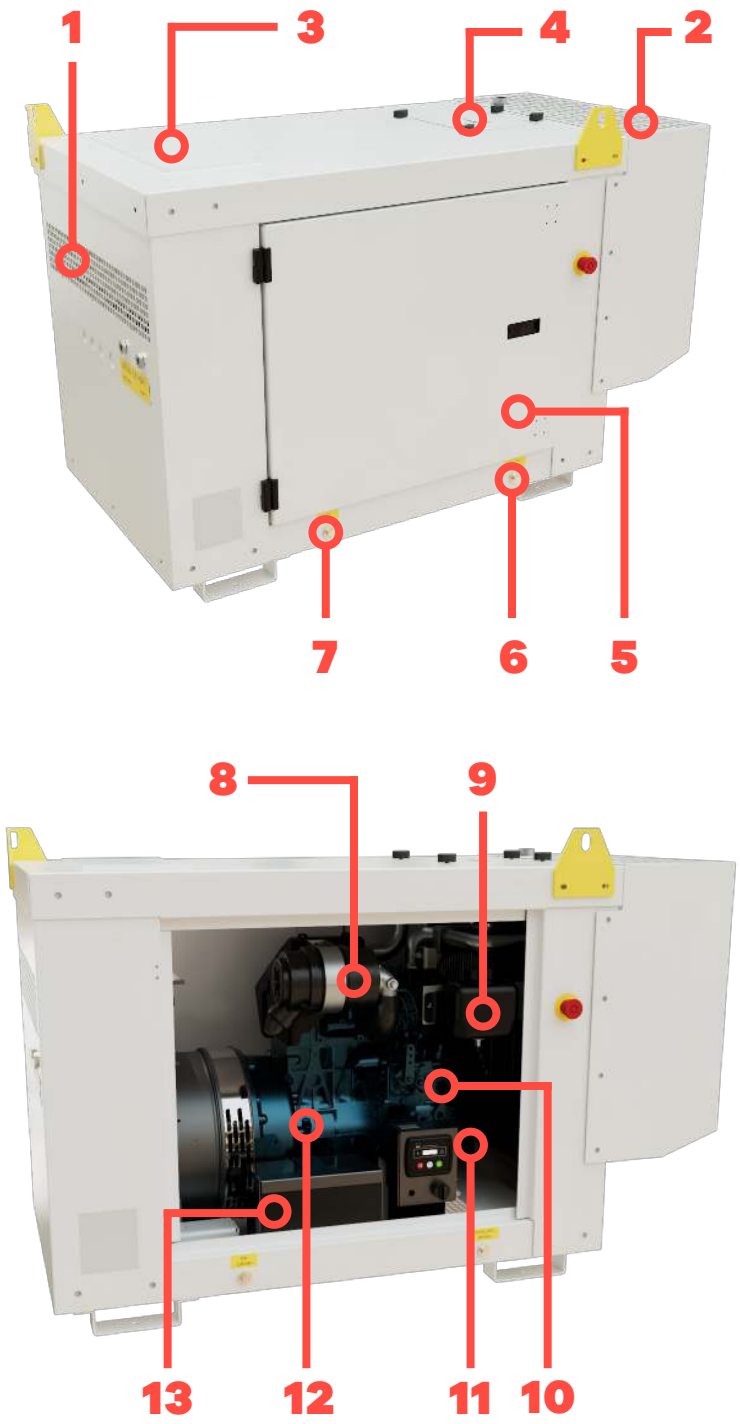

NUMBER	ITEM / FUNCTION
1	Air Inlet
2	Radiator Air Outlet
3	Generator Wiring Access Cover
4	Radiator Cap Access Cover
5	Main Access Door
6	Coolant Drain Plug
7	Oil Drain Plug
8	Air Cleaner
9	Coolant Overflow Bottle
10	Oil Fill
11	Oil Filter
12	Dipstick
13	Battery

Figure 3: Important Components

ai-engines.com
info@ai-engines.com

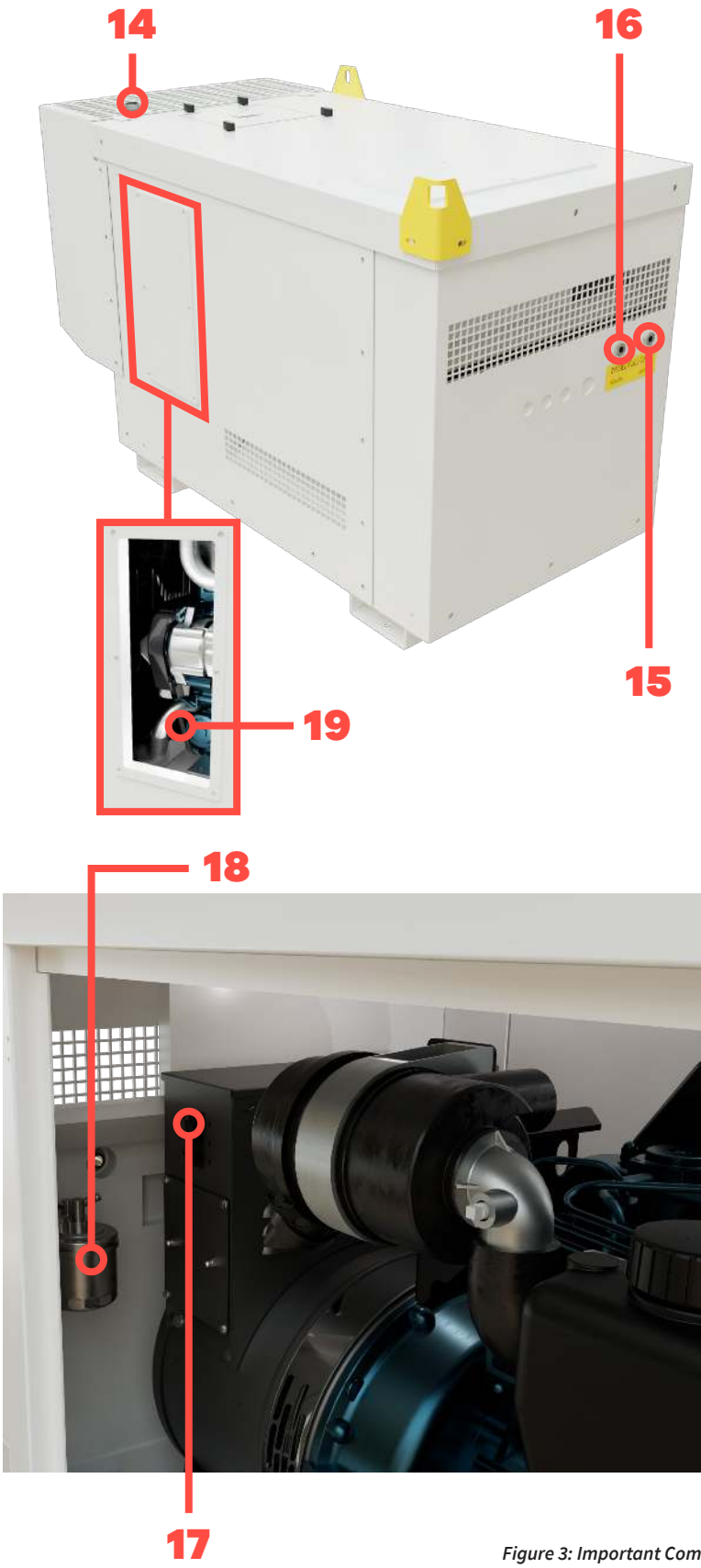

NUMBER	ITEM / FUNCTION
14	Exhaust Outlet
15	Fuel Supply Port
16	Fuel Return Port
17	Breaker/Generator Box
18	Fuel Filter
19	Drive Belt

Figure 3: Important Components (cont.)

ai-engines.com
info@ai-engines.com

FUEL RECOMMENDATIONS

WARNING

*****Diesel fuel is combustible and can cause severe personal injury or death. Do not smoke near diesel fuel tanks or equipment. Keep all flames, sparks, or all other sources of ignition well away.*****

The use of ultra-low sulfur fuel (15ppm or 0.0015 wt.%) is mandatory when operated in US EPA regulated areas. The use of Kerosene, whether blended with diesel or otherwise is prohibited within US EPA regulated areas. Please use No. 2-D S15 diesel fuel as an alternative to No. 2-D and use No. 1-D S15 for ambient temperatures below -10°C (14°F).

The minimum recommended Cetane rating is 45. A Cetane rating of greater than 50 is preferred, especially for ambient temperatures below -20°C (-4°F) for elevations above 1500m (5000 ft.). Kerosene, which is very low in Cetane rating, adversely affects the engine and is prohibited within US EPA regulated areas and should be avoided in areas outside of US EPA regulated areas.

Biodiesel blends of up to 5% (B5) may be used in the genset. Blends of biodiesel above 5% may void the engine warranty. Biodiesel fuels must be blended according to EN 590 or ASTM D975. Raw processed vegetable oils are not acceptable for use in any concentration.

Reference Engine Operator Manual when using anything other than ultra-low sulfur diesel as the oil change interval will change.

ENGINE OIL RECOMMENDATIONS

Use engine oil that is CF or better API classification with a high Total Base Number (a minimum TBN of 10 is recommended). Change the viscosity of engine oil according to the ambient temperature **(Figure 4)**. Synthetic oil may be used after the initial break-in period. Maintain proper engine oil change intervals when using full synthetic engine oil, do not extend the oil change interval.

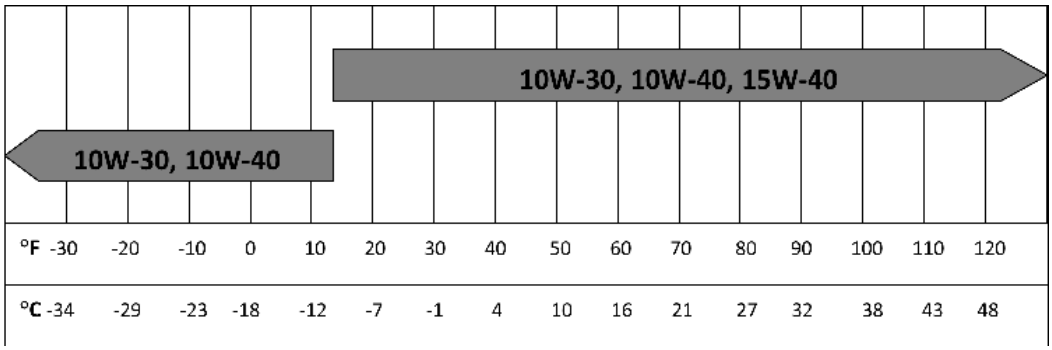

Figure 4: Oil Viscosity vs. Ambient Temperature

STARTING BATTERIES

The genset uses a 12V direct current starting, charging and control system. The battery is a 500 CCA, sealed type. Regular maintenance of the battery may be required in order to ensure proper starting performance. The genset is shipped with the battery disconnected and will need to be connected before first running the genset.

OPERATOR INTERFACE

The main operator interface is installed inside the genset, behind the genset's door, see **Figure 5**. The Deep Sea 3110 panel is responsible for all genset starting, stopping, and safety monitoring. For more information on using the Deep Sea panel, see **OPERATION** on page 19.

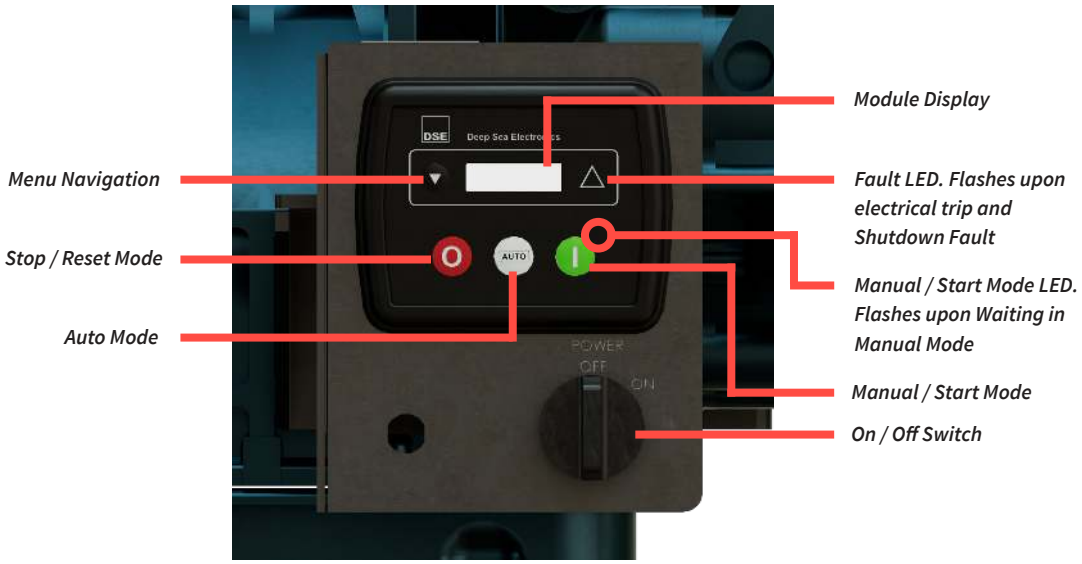

Figure 5: Operator Interface Panel

On/Off Switch - This switch is responsible for supplying main power to the control panel.

Module Display - This screen will display genset status, engine hours, engine rpm, generator voltage, generator frequency, warning icons and fault icons.

Fault LED - This light will glow when any alarm or shutdown condition is present.

Menu Navigation Button - This button allows the user to cycle through values displayed on the main status display.

Stop/Reset Button - This button will immediately stop the engine when pressed. It will also clear any fault icons when the engine is in stop mode if the fault condition is no longer present.

Auto Mode Button - This button will toggle the control panel in and out of Auto mode. This is only applicable if a remote start signal has been connected to the control panel. See **STARTING THE GENSET** on page 20 for operating instructions.

Manual/Start Mode Button - This button will initiate the pre-heat and start sequence when the engine is in stop mode.

INSTALLATION

This section will guide you through proper installation of the SQ Genset. Proper installation is key to correct genset operation and ensuring the long life of the unit. Read this entire section thoroughly BEFORE installing the genset.

The SQ Genset requires an external fuel source. It is up to the installer to provide an acceptable fuel tank, run fuel lines, install the supplied pre-filter, and relocating the installed fuel pump as needed. Only a technician experienced with diesel engines and generators should install this genset. High voltage electrical connections must be made before operating the genset. All high voltage electrical connections should be made by an electrician in accordance with all local codes.



Electric shock can be deadly. Failure to install a generator set with an electrical system consistent with governing regulations is **UNLAWFUL** and may cause **ELECTROCUTION** to installer or operator. Never connect this generator to utility power or back feed existing electrical systems without proper transfer switch gear in place.



Diesel fuel is combustible and can cause severe personal injury or death. Do not smoke near diesel fuel tanks or equipment. Keep all flames, sparks, or all other sources of ignition well away.



Exhaust gas is deadly. Never operate the genset without proper ventilation. Check for leaks in the exhaust system regularly. Exposure to exhaust gases can cause carbon monoxide poisoning. Symptoms of carbon monoxide poisoning include dizziness, throbbing in temples, nausea, muscular twitching, headache, vomiting, weakness and sleepiness, and inability to think clearly. If you or anyone experiences these symptoms, get to fresh air immediately. If symptoms persist, seek medical attention.



Battery gas is explosive. Do not smoke or introduce any sparks, flames or arcs near the battery at any time. Do not make direct contact between battery terminals to prevent sparks.

CAUTION Many engine components and fluids can be hot and cause severe burning on contact. Exhaust piping, engine oil, engine coolant, exhaust insulation, radiator core, and other parts can become extremely hot after extended operation. Do not work on a genset until it has sufficiently cooled.

CAUTION Moving parts can cause personal injury. Keep hands, feet and clothing away from belts, pulleys, fans and rotors while engine is operating. Always replace safety guards, screens and covers before operating the genset.

MOUNTING THE GENSET

The SQ Genset is designed to be mounted with the supplied mounting legs to allow at least two inches of space below the genset for the unit to properly draw in fresh air. When mounting unit to mounting pad or trailer flatness should be checked before tightening down the genset as shims may be needed to provide a level installation.

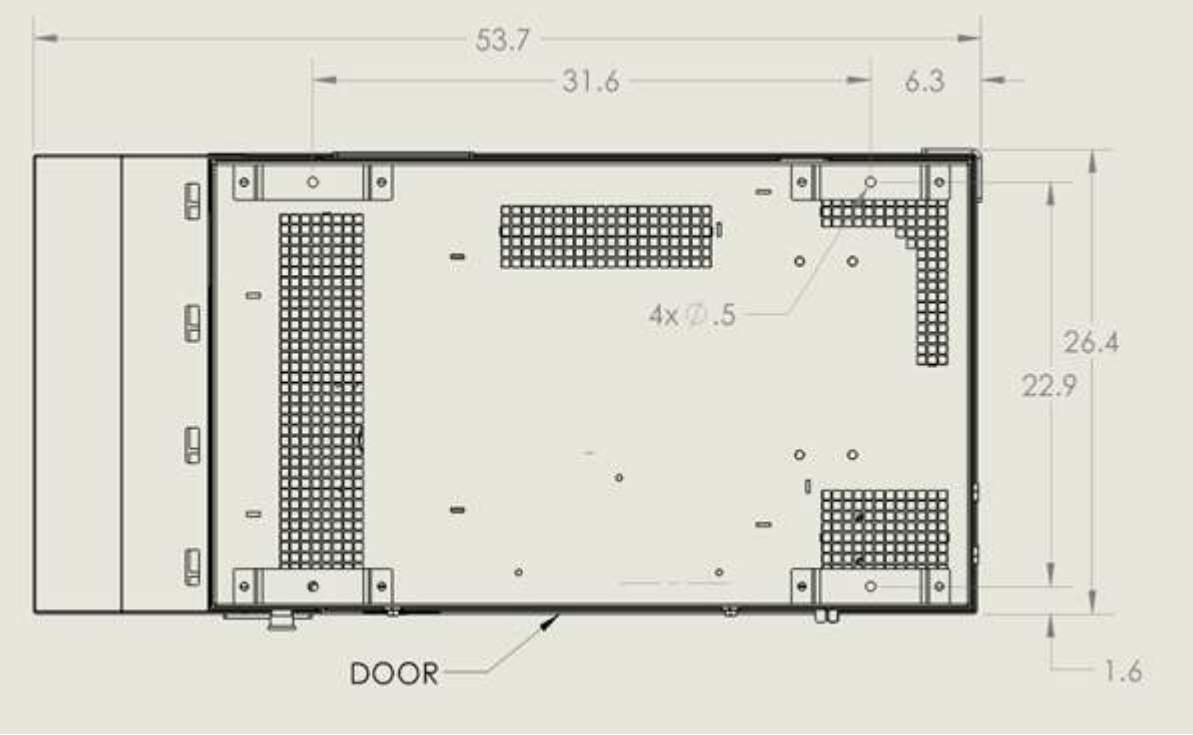

Figure 6: Mounting Against a Solid Surface

FUEL TANK INSTALLATION

The SQ Genset is intended to draw from a nearby tank or a sub-base fuel tank below the unit. The genset is shipped with labeled fuel supply (5/16”) and return (3/16”) barb connections. Fuel lines should be routed so that the fuel lines are not kinked, pinched, or unprotected around sharp edges as they are routed to the fuel tank, secured as needed.
An electric fuel pump is installed within the genset. When installing the fuel tank, observe the following:

- Mount the fuel tank nearby or underneath the genset.
- The fuel tank bottom should not be more than 10 inches below the genset’s mounting feet.

If the fuel tank bottom is more than 10 inches below the genset’s mounting feet a high lift fuel pump will be needed, kit SQ10000-FUL.P. Observe the following when installing the fuel tank while using the SQ10000-FUL.P kit in its standard fuel pump location in the genset:

- Mount the fuel tank nearby or underneath the genset.
- The fuel tank bottom should not be more than 54 inches below the genset’s mounting feet.

If the fuel tank bottom is more than 54 inches below the genset’s mounting feet or the distance away from the tank is excessive the SQ10000-FUL.P kit will need to be mounted remotely and push the fuel to the engine instead of pulling. Observe the following when installing the fuel tank while using the SQ10000-FUL.P kit remotely:

- Mount the pump as close to the tank as possible. The pump is much better at pushing fuel than it is at pulling.
- It is recommended to mount the pump within 60” vertically of the bottom of the fuel tank.
- Install the supplied fuel pre-filter between the fuel tank and the electric pump.
- Install the fuel pump so that the “Flow” arrow noted on the fuel pump points toward the engine along the fuel line path.
- Add additional 16 gauge wires to the Deutsch 8 pin plug and route to new fuel pump location, pin 1 is ground, pin 3 is fuel pump positive.
- Route these two wires inside split-loom or similar protective jacket to the fuel pump, avoiding sharp edges or moving objects, securing as needed.

MECHANICAL DIESEL

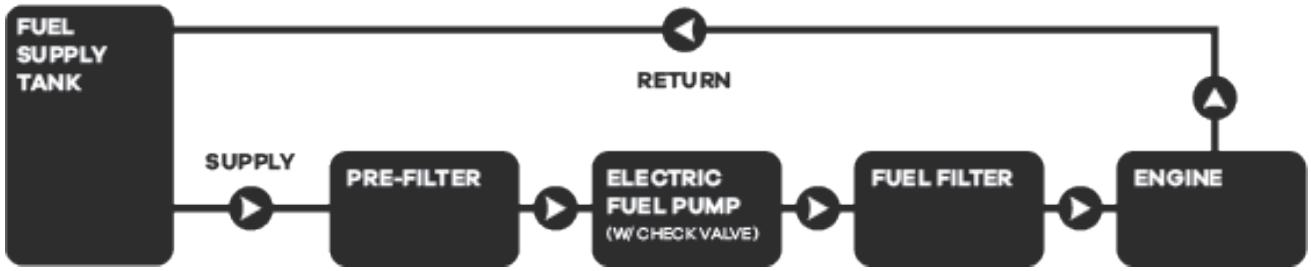

ai-engines.com
info@ai-engines.com

HIGH VOLTAGE ELECTRICAL CONNECTIONS

All wiring must comply with local electrical codes. A qualified electrician must perform all electrical wiring connections. All SQ Genset generators are supplied with a main circuit breaker, control panel voltage sense lead fuses, and a distribution block inside the generator box, see **Figure 3** on page 10 and 11 to locate the breaker. The circuit protected leads and generator Neutral are wired to the distribution block for user connections. Generator ground is located inside the generator box as well via noted grounding bolt into generator case. A Neutral-Ground bonding wire is provided, shipped loose. Install as needed per local electrical code or needs.

A schematic of the high voltage wiring system can be found in **APPENDIX B: AC WIRING SCHEMATIC** on page 32. Please note **Figure 7** for the distribution block AC wiring and cable arrangements.

All high voltage cable should be routed through appropriate cord grips (if using SO cable) or conduit and safely routed outside of the genset while complying with local electrical codes. Under no circumstances should the customer make connections directly to the generator.

AC WIRING TERMINATION

Termination of the high voltage wiring is the responsibility of the installer. All high voltage connections must be made to appropriately sized cord caps or components. A Neutral-Ground bonding strap is provided with the unit to be connected from Neutral to the labeled ground of the generator box.

SINGLE PHASE

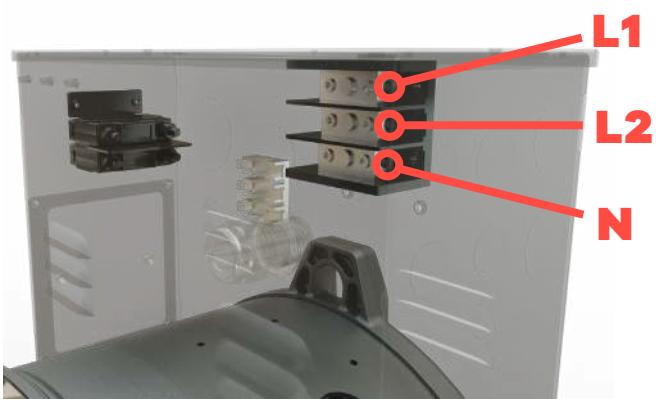

3 PHASE

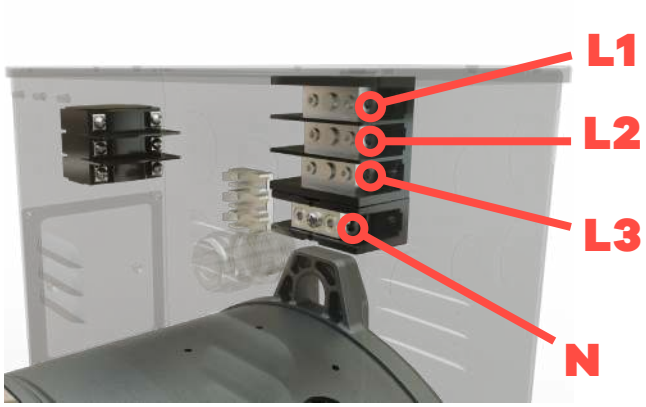

Figure 7: AC Wiring Markings

ai-engines.com
info@ai-engines.com

AUXILIARY WARNING, SHUTDOWN, AND EMERGENCY STOP WIRING

By default, the SQ90000/SQ10000 uses a red mushroom-style emergency stop to activate the Emergency Stop shutdown for the engine. When the emergency stop input is active (grounded), the engine will not be allowed to crank or run under any circumstances. When the emergency stop input is active, the control panel will display the emergency stop icon, see **Figure 8**, and will prevent the generator from starting.

An additional input for the emergency stop input is available in pin #5 of the Deutsch 8 pin plug. Supplying a ground (pin #1 of the Deutsch 8 pin plug) to pin #5 of the Deutsch 8 pin plug will cause the Emergency Stop shutdown to become active and will immediately stop the generator and prevent the unit from running regardless what the standard generator emergency stop status is. See **Figure 13** in the **SUPPORTING DOCUMENTS** section on page 31 for wiring schematic.

The SQ Genset is also programmed by default for one auxiliary shutdown input, pin #7 of the Deutsch 8 pin plug (Digital Input C) for user connections. When the ground (pin #1 of the Deutsch 8 pin plug) is connected to pin #7 of the Deutsch 8 pin plug and the 10 second safety timer has expired the Digital Input C shutdown will become active. The control panel will shut down the engine and display the icon for the auxiliary C shutdown. Active auxiliary shutdown inputs will not prevent the generator from starting.

A low fuel level warning is also enabled on the control panel for optional use. Supplying a ground (pin #1 of the Deutsch 8 pin plug) to pin #8 of the Deutsch 8 pin plug will cause the Low Fuel Level Warning to become active and display the noted Low Fuel Level Warning. This will not shutdown the generator or prevent it from starting, although generator performance and startabilty could be affected as fuel is depleted.

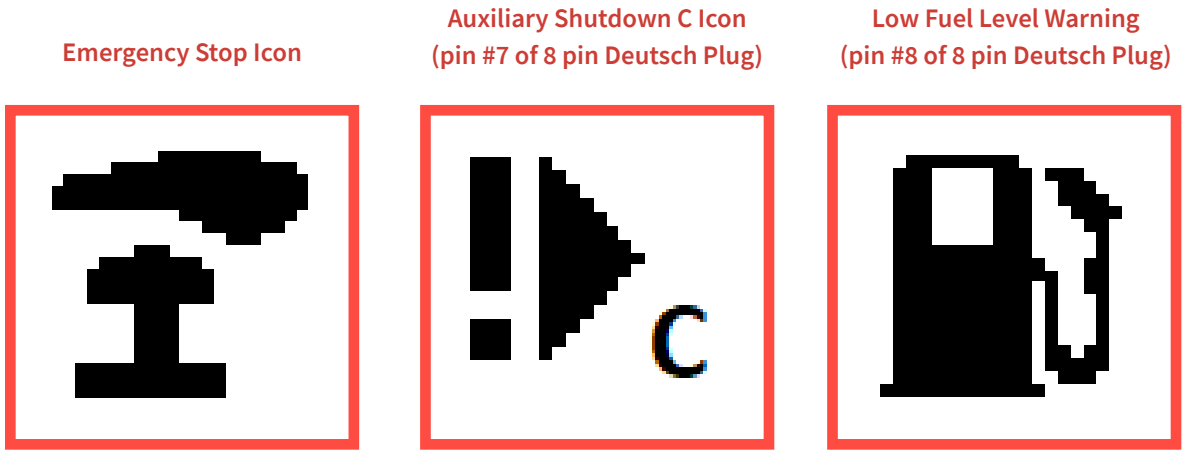

Figure 8: Auxiliary Shutdown and E-Stop Icons

ai-engines.com
info@ai-engines.com

AUTO MODE REMOTE START SETUP

The standard 3110 DSE Control Panel comes preset to accept a remote start input. To do this Pin #1 and #6 of the 8 pin Deutsch plug need to be connected together while the control panel is turned on and in Auto Mode. When the wires are connected together the unit will begin its start sequence, start, and run automatically. Disconnecting these two wires will then turn the unit off. See **Figure 13** in the **SUPPORTING DOCUMENTS** section on page 31 for wiring schematic.

Wires should be routed appropriately, staying away from sharp edges or moving parts and safely routed outside of the genset. These connections are part of the 12VDC ground so no voltage will be passed through whatever switching device is used to make this connection remotely. 18 gauge, 2 conductor cable is sufficient for most installations.

The DSE 3110 will be powered on while in Auto Mode and waiting for a Run command. After being put into Auto Mode the control panel will go into a Standby Mode, only drawing up to 51mA from the 12VDC battery. After 60 minutes the unit will go into a Deep Sleep Mode, drawing less the 10 µA from the battery, while waiting for the Run Command.

CONNECTING THE BATTERY

The genset is shipped with the battery disconnected and will need to be connected before first running the genset. To do so, attach the positive (red) battery cable to the larger positive post of the battery, this post and clamp is tapered so if the clamp does not fit over the entire post flip the clamp over. Tighten the nut on the clamp until the clamp cannot rotate on the post. Repeat for the negative (black) cable on the smaller negative post.

OPERATION

DANGER Diesel fuel is combustible and can cause severe personal injury or death. Do not smoke near diesel fuel tanks or equipment. Keep all flames, sparks, or all other sources of ignition well away.

WARNING Exhaust gas is deadly. Never operate the genset without proper ventilation. Check for leaks in the exhaust system regularly. Exposure to exhaust gases can cause carbon monoxide poising. Symptoms of carbon monoxide poisoning include: dizziness, throbbing in temples, nausea, muscular twitching, headache, vomiting, weakness and sleepiness and inability to think clearly. If you or anyone experiences these symptoms, get to fresh air immediately. If symptoms persist, seek medical attention.

PRE-START CHECKS

In order to prevent problems and identify maintenance situations early, it is important to perform a pre-start check before each use of the genset. Before each start:

1. Check for oil and coolant leakage
2. Check all air inlets and outlet for obstructions or clogging
3. Check radiator fins for clogging
4. Check for signs of fuel leaks, exhaust leaks or damage to either system
5. Check belt tension
6. Check engine oil level
7. Check engine coolant level
8. Turn off any large loads

PRIMING THE FUEL SYSTEM

The fuel system should be primed before first being run, after the replacement of a fuel filter, if the fuel system has been drained or the unit has run out of fuel. Prime the fuel system by pressing the START button and allowing it to run the fuel pump for about 8-9 seconds then press the STOP button. Do this procedure several times, waiting 10 seconds between START button presses. This process is running both the glow plugs and the fuel pump preparing the engine to start. By pressing the STOP button before 10 seconds the engine will not attempt to start. At least 10 seconds of cool down is needed between glow plug operations, which is the reason for waiting between START button presses. Without waiting the 10 seconds, the glow plugs could fail or shorten their life.

Once fuel is to the engine bleed air from the lines by cracking open the air vent cock on the top of the on engine injection pump. You should never prime the fuel system by cranking the engine. Excessive cranking while the fuel system is dry can lead to damage of the injection pump or starter motor and void warranty.

STARTING THE GENSET

The genset can be started from the on board control panel (manual). The control panel has several different modes of operation, for a complete list, see **Figure 9** on the following page.

ICON DISPLAYED	CONTROL PANEL MODE
	***Stop Mode:*** The genset is stopped with no oil pressure and ready for a manual start.
	***Auto Mode:*** The genset is stopped and in Auto Mode, waiting for an remote start input to tun on genset
	***Running Mode:*** The genset is running with no faults.
	***Timer Mode:*** The genset is waiting for a timer to expire. There are several timers that may cause this icon to be displayed.

Figure 9: Control Panel Operating Modes

Before each start be sure to check for exhaust and fuel leaks. Also, turn off all large appliances connected to the generator or turn off the main breaker. Starting the generator with loads attached can prevent the generator from starting and damage the starter motor.

Once the genset is running, the operator can view genset parameters on the Home screen or by pressing the navigation button  to navigate to the Generator voltage and frequency screens.

STARTING THE GENSET MANUALLY

In order to start the genset manually:

1. Turn the On/Off switch to the ON position. The Deep Sea panel will power up, check oil pressure and display the stop icon  .
2. Momentarily press the START  button. The panel will display the timer icon  as the panel begins its 10 second pre-heat and crank cycle.
3. If the engine does not start after three crank attempts, the panel will display the fail to start icon  .

ai-engines.com
info@ai-engines.com

4. After the genset starts, a 10 second Safety On timer activates and the timer icon  is displayed. The safety timer allows Oil Pressure, High Coolant Temperature, Under-speed, Charge Fail and any delayed Auxiliary fault inputs to stabilize without triggering a fault.

5. Once the engine is running and the Safety On timer has expired, the animated run icon  is displayed.

6. Warm up the engine without a load. A warm-up period will maximize engine life. See **Figure 11** for recommended warm up times.

7. Check for leaks of coolant, exhaust gases, or fuel. Turn off the genset immediately if leaks are found.

8. Turn on any connected devices.

AMBIENT TEMPERATURE	WARM-UP TIME REQUIREMENT
ABOVE 0° C (32° F)	AT LEAST 10 MINUTES
0° C (32° F) TO -10° C (14° F)	10 TO 20 MINUTES
BELOW -10° C (14° F)	MORE THAN 20 MINUTES

Figure 11: Recommended Warm Up Times

STARTING THE GENSET IN AUTO MODE

In order to start the genset in Auto Mode:

1. Turn the On/Off switch to the ON position. The Deep Sea panel will power up, check oil pressure and display the stop icon  .
2. Momentarily press the AUTO  button. The panel will display the Auto Mode icon  as the panel waits for an input to start the unit remotely.
3. Manipulate the remote start switch (See **AUTO MODE REMOTE START WIRING** for setup) to the run position. The unit will begin its start sequence, start, and then run automatically.
4. Follow steps 4 through 8 in the previous section of **STARTING THE GENSET MANUALLY** .

STOPPING THE GENSET MANUALLY

When operating in manual mode, under normal circumstances, to stop the genset:

1. Turn off or disconnect all electrical loads.
2. Allow the genset to cool down for about 5 minutes.
3. Press the red STOP  button on the control panel.
4. Turn the On/Off switch to the OFF position.

STOPPING THE GENSET IN AUTO MODE

1. Turn off or disconnect all electrical loads.
2. Allow the genset to cool down for about 5 minutes.
3. Manipulate the remote start switch (See **AUTO MODE REMOTE START WIRING** for setup) to the off position. The unit will begin its shutdown sequence, stop, and then return to Auto Mode wait for the next run input.

OPERATING AT HIGH ALTITUDES

The maximum output power available decreases as altitude increases due to a drop in air density. For every 1000 foot increase in elevation you can expect power output to drop by approximately 3%. For all specifications published assume an elevation of 0 feet (sea level).

OPERATING IN HOT AMBIENT TEMPERATURES

The SQ Genset is rated for operation at full published power to 120°F. When operating in high temperature ambient conditions, it is especially important to ensure proper air flow to the genset. In addition, engine oil with the proper viscosity must be used, see **Figure 4** on page 12.

With adequate air flow, the SQ Genset will operate at full published power in ambient conditions up to 120°F. If the genset is going to be operated at higher ambient conditions, it will not be able to supply full power.

OPERATING IN COLD AMBIENT TEMPERATURES

When operating in low temperature ambient conditions, be sure to use the correct engine oil viscosity, see **Figure 4** on page 12. When starting in cold weather, it may be necessary to allow the engine to complete more than one preheat and crank cycle to start. Once started, allow the engine to run and warm up for 5-10 minutes prior to applying any load.

OPERATING IN DIRTY ENVIRONMENTS

When operating in dirty or dusty environments, it may be necessary to:

1. Replace air filters after fewer hours than is recommended in the **MAINTENANCE** section on page 26.
2. Check all inlet air ports to the genset to make sure they have not become clogged or restricted.
3. Check that the radiator is free from restriction.
4. Change engine oil more often than is recommended in the **MAINTENANCE** section on page 26.

BREAKING IN A NEW ENGINE

Every new engine goes through a break in period in which mechanical components settle into the stable conditions that they will operate under after the break in period is complete. Correctly breaking in an engine is important for top engine performance and correct oil and fuel consumption.

The break in period lasts at least four hours. In order to break in your genset:

1. Do NOT use synthetic oil during the break in period. (See **ENGINE OIL RECOMMENDATIONS** on page 12)
2. Operate the genset at approximately ½ load for at least two hours and then ¾ load for at least 2 more hours.
3. Check oil level at least once a day.
4. Change engine oil and oil filter after 50 hours of operation.

STORAGE AND RETURNING TO SERVICE

WARNING

- **Secure the genset to prevent movement during operation.**
- **To not stand near or under the genset while it is suspended.**
- **The genset is heavy; use only equipment capable of handling such loads.**
- **When transporting the genset, remove the black negative (-) battery cable from the battery, disconnect and cap fuel supply and return lines, and keep the genset level.**

To transport the generator, use only suitable equipment such as a crane or fork lift. For approximate generator weight, refer to the SPECIFICATIONS on page 8. If the genset cannot be used regularly or will be idle for more than 4 months, use to the following procedure to prepare the unit for storage.

1. Disconnect any electrical loads.
2. Turn off the main circuit breaker.
3. Disconnect the fuel supply and return lines. Cap inlet and outlet fuel ports.
4. Disconnect the wires to the electric fuel pump.
5. Turn the On/Off switch to the OFF position and remove the key.
6. Change engine oil. Make note of oil viscosity used.
7. Disconnect the battery cables, beginning with the Negative (-) cable.
8. Secure the battery cables to prevent inadvertent shorting to the battery terminals. Remove the battery from the genset and store in a dry and dark place.
9. Plug the exhaust pipe to prevent ingress of dirt, moisture, and rodents.
10. Store in a flat, dry place away from flammable materials.
11. To prevent damage from rust or corrosion, run the engine for 5 minutes under no load every 2 to 3 months it is kept in storage.

To return the generator to service, use the following procedure:

1. Verify that oil used to store the unit is appropriate for its new use. If necessary, replace with correct engine oil. See ENGINE OIL RECOMMENDATIONS on page 12.
2. Re-install and reconnect the battery, starting with the positive (+) battery cable.
3. Remove plug from exhaust pipe. Inspect for debris, remove if necessary.
4. Reconnect the fuel supply and return lines.
5. Reconnect the wires to the electric fuel pump.
6. Reconnect electrical loads.
7. Turn on main breaker.
8. Perform a pre-start check, see PRE-START CHECKS on page 20.

Periodic maintenance is the single most important factor for genset life and performance. Figure 12 outlines the recommended maintenance items for normal genset use. If you are operating in exceptionally hot or dusty environments, more frequent service may be required. Please refer to the supplied Kubota Operators Manual for specific maintenance procedures.

PROCEDURE	DAILY	FIRST 50 HOURS	EVERY 100 HOURS	EVERY 200 HOURS	EVERY 400 HOURS	EVERY 500 HOURS	EVERY 1 YEAR	EVERY 2 YEARS
Check Fuel Lines and Clamps	X							
Check Oil Level	X							
Check Coolant Level	X							
Empty Air Cleaner Evacuator Valve	X							
Check Battery		X	X					
Check Drive Belt Tension			X					
Check Radiator Hoses and Clamps				X				
Change Engine Oil*		X		X				
Change Engine Oil Filter*		X			X			
Replace Fuel Filter		X			X			
Replace Air Filter Element**					X		X	
Replace Drive Belt						X		X
Flush Coolant System								X
Replace Radiator Cap								X
Replace Radiator Hoses and Clamps								X
Replace Fuel Hoses and Clamps								X

*** Engine oil and filter should be replaced more often if operating in hot or dusty environments.**
**** Air filter element should be replaced more often when operating in dusty environments.**

Figure 12: Periodic Maintenance Schedule

TROUBLESHOOTING/ FAULT ICONS

CAUTION **Always perform checks in the STOP condition, except checks that require the generator to be running. Keep hands and loose clothing away from rotating parts at all times during operation. Hot engine parts can cause severe burns. Allow the engine to cool before performing any checks.**

If you are experiencing trouble with your genset, use the tables below to try and resolve your issue. If you are still experiencing problems, contact an authorized Kubota engine dealer.

The Deep Sea controller is capable of providing valuable diagnostic information in the event of an unexpected genset shutdown. When the controller identifies a shutdown condition, it will stop the genset, light the Stop/Reset Mode LED (just above red STOP button) and display a fault icon.

The digital inputs and outputs on the Deep Sea controller are all programmable. All documentation references to the default programming. For modifications to the programming, please refer to the **DSE 3110 INSTALLATION INSTRUCTIONS** available at ***https://bit.ly/aiesqsupport***, or scan the QR code in the **SUPPORTING DOCUMENTS** section on page 31.

For help troubleshooting abnormal genset behavior, please consult the tables below.

CONTROL PANEL TROUBLESHOOTING

TROUBLE	CAUSE	SOLUTION
When the On/Off switch is turned on, the control panel does not illuminate.	Battery disconnected or dead	Check battery connections, charge if necessary
	Blown main engine power fuse	Check control panel power fuse. Replace if necessary
	Faulty control panel	Replace control panel
Panel shows HIGH TEMPERATURE fault ico when engine stops 	Engine overheating	1. Lower generator load 2. Check for debris blocking radiator 3. Check engine coolant level
	Water temperature switch faulty	Replace water temperature switch
	Water temperature switch wiring faulty	Check for continuity between water temperature switch and pin 12 on control panel. Repair any damaged wiring.

TROUBLE	CAUSE	SOLUTION
Panel shows LOW OIL PRESSURE fault icon:  Also see “Engine stops unexpectedly”	Insufficient engine oil pressure	Check engine oil level and add oil as needed.
	Lubrication system malfunctioning	See an authorized Kubota engine dealer
	Oil pressure switch faulty	Replace oil pressure switch
	Oil pressure switch wiring faulty	Check for continuity between oil pressure switch and pin 11 on control panel. Repair any damaged wiring.
	Loss of engine speed	See **ENIGNE STOPS UNEXPECTEDLY** in **ENGINE TROUBLESHOOTING** table
Panel shows CHARGE FAIL fault icon: 	Poor contact of charge alternator connector	Tighten alternator connector. Check for continuity between charge failure wire on alternator (green/white wire) and pin 5 on control panel. Repair any damaged wiring.
	Alternator not exciting	Verify that green wire in alternator connector is being supplied with 12V during genset operation.
	Charge alternator failure	Replace charge alternator
	Generator overload	1. Lessen generator load 2. Stage starting of large motors (air conditioners, appliances)
	Loose fan belt	Tighten fan belt
Panel shows UNDERSPEED fault icon 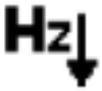 Output frequency is under 50Hz.	Fuel filter is clogged or dirty	Replace primary fuel filter and/or pre-filter
	Air filter is clogged or dirty	Replace air filter
	Genset is overloaded	1. Lessen generator load 2. Stage starting of large loads
	Governor unable to regulate engine speed	See authorized MeccAlte dealer

TROUBLE	CAUSE	SOLUTION
Panel shows OVERSPEED fault icon when engine stops  Output frequency exceeds 70Hz.	Governor rebound from sudden loss of load	Stage the shutoff of different electrical loads
	Governor unable to regulate engine speed	See authorized Kubota engine dealer
Panel shows UNDERVOLTAGE fault icon when engine stops  Generator output is below 75% of nominal voltage	Loss of engine speed	See **ENIGNE STOPS UNEXPECTEDLY** in **ENGINE TROUBLESHOOTING** table
	Generator overload	1. Lessen generator load 2. Stage starting of large loads
	Automatic Voltage Regulator (AVR) unable to regulate to rated voltage	See authorized MeccAlte dealer
Panel shows OVERVOLTAGE fault icon:  Generator output is above 125% of nominal voltage	Governor rebound from sudden loss of load	Stage the shutoff of different electrical loads
	AVR unable to regulate to rated voltage	See authorized MeccAlte dealer
Panel shows the EMERGENCY STOP icon: 	Emergency stop input activated	Emergency stop is activated. Check that the red mushroom head emergency stop on door side of genset is operating correctly.
Panel shows the DIGITAL INPUT C SHUTDOWN icon: 	DIGITAL INPUT C – Auxiliary Shutdown input active	Check Auxiliary Shutdown that is installed into pin 7 of Deutsch 8 pin plug. See **AUXILIARY WARNING, SHUTDOWN, AND EMERGENCY STOP WIRING**
Low cranking speed	Bad battery connection	Clean and tighten positive and negative battery cable connections on battery and at genset.
	Low Battery Voltage	Recharge or replace battery.
	Engine oil viscosity too high	Replace engine oil with 10W-30 or 10W-40 for cold weather.
	Parasitic load during cranking	Disconnect all electrical loads during cranking

TROUBLE	CAUSE	SOLUTION
Engine cranks but does not start. Control panel displaying FAIL TO START fault symbol after 3 crank attempts 	Fuel shortage	Refill fuel tank.
	Air or water in fuel system	1. Check all fuel connections for loose or damaged fasteners. Replace if necessary 2. Bleed air from fuel lines 3. Remove water from fuel tank
	Fuel restriction	1. Check fuel filter. Replace if dirty 2. Check fuel tank. Remove settled impurities or moisture
	Loose injection line	Tighten injector line
	Air restriction	Check engine air filter. Replace if necessary.
Engine stops unexpectedly. See **CONTROL PANEL TROUBLESHOOTING** above for panel diagnostics.	Fuel shortage	Refill fuel tank.
	Air or water in fuel system	1. Check all fuel connections for loose or damaged fasteners. Replace if necessary 2. Bleed air from fuel lines 3. Remove water from fuel tank
	Fuel restriction	1. Check fuel filter. Replace if dirty 2. Check fuel tank. Remove settled impurities or moisture
	Air restriction	Replace air cleaner element
Starter engages and disengages	Low battery voltage	Recharge or replace battery
	Bad battery connection	Clean and tighten positive and negative battery cable connections on battery and at genset.
Engine fails to stop after pressing the stop button. The control panel displays the FAIL TO STOP ICON: 	Power is back-fed through electrical circuit	Check all auxiliary wiring connected to the fuel pump circuit. Be sure that power is not being fed into the circuit from an external source.

SUPPORTING DOCUMENTS

Scan the QR code below to go to our SQ-Series support webpage, or visit ***https://bit.ly/aiesqsupport*** to view the following supporting documents:

- Appendix A: DC wiring schematic (MI-1726-H)
- Appendix B: AC wiring schematic, single phase (MI-1748-K)
- Appendix B: AC wiring schematic, 3 phase (MI-1761-K)
- DSE 3110 Operator Manual
- DSE 3110 Installation Instructions
- Generator material documents

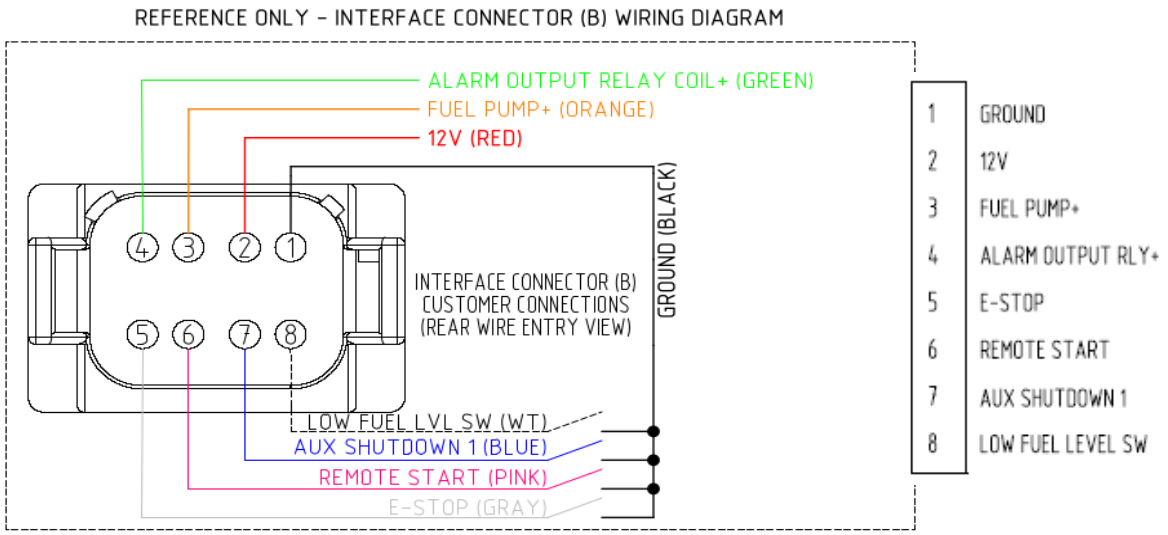

Figure 13: MI-1726-H (interface connector B) wiring schematic

APPENDIX A: DC WIRING SCHEMATIC

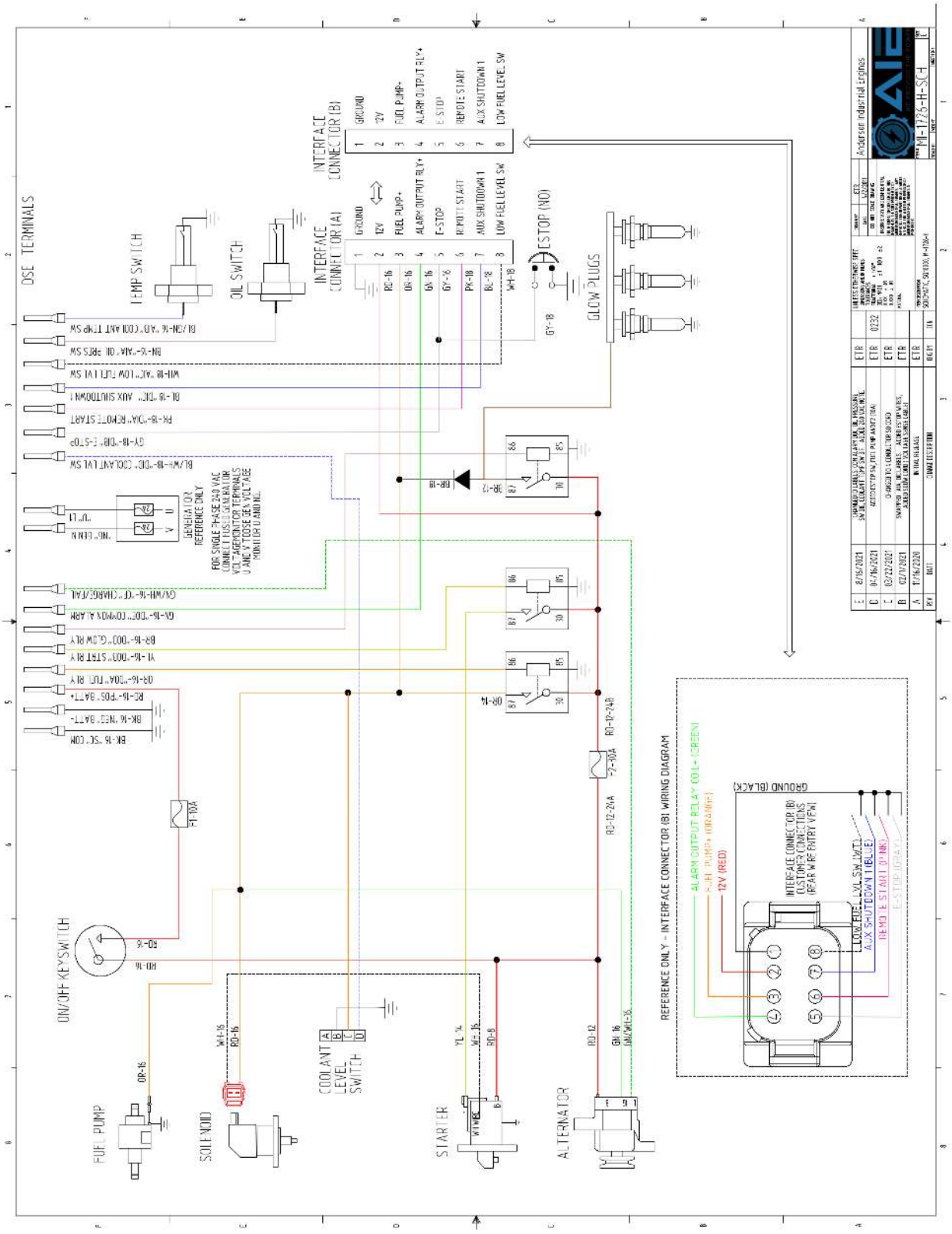

SUPPORTING DOCUMENTS

APPENDIX B: AC WIRING SCHEMATIC (SINGLE PHASE)

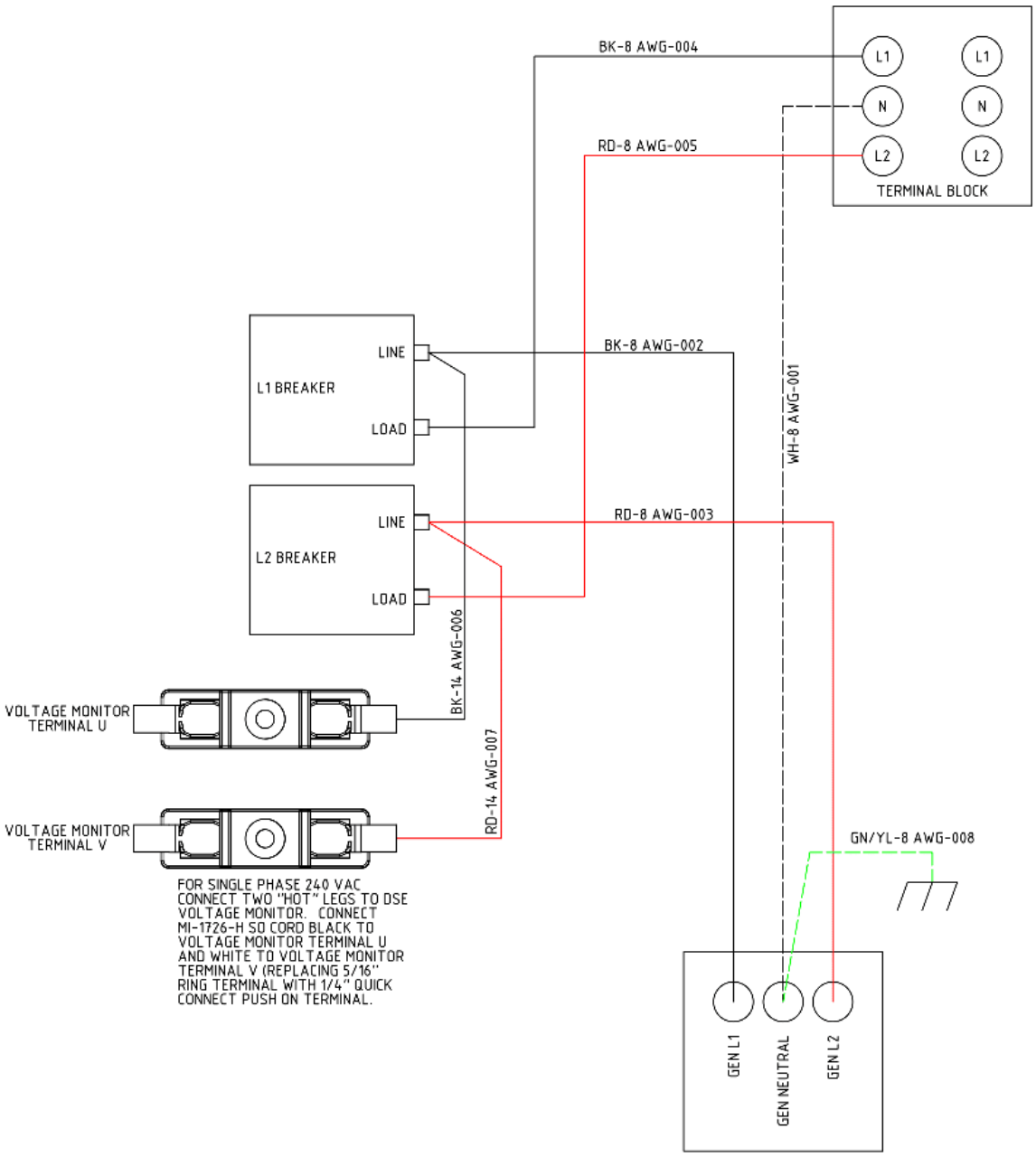

SUPPORTING DOCUMENTS

APPENDIX B: AC WIRING SCHEMATIC (3 PHASE)

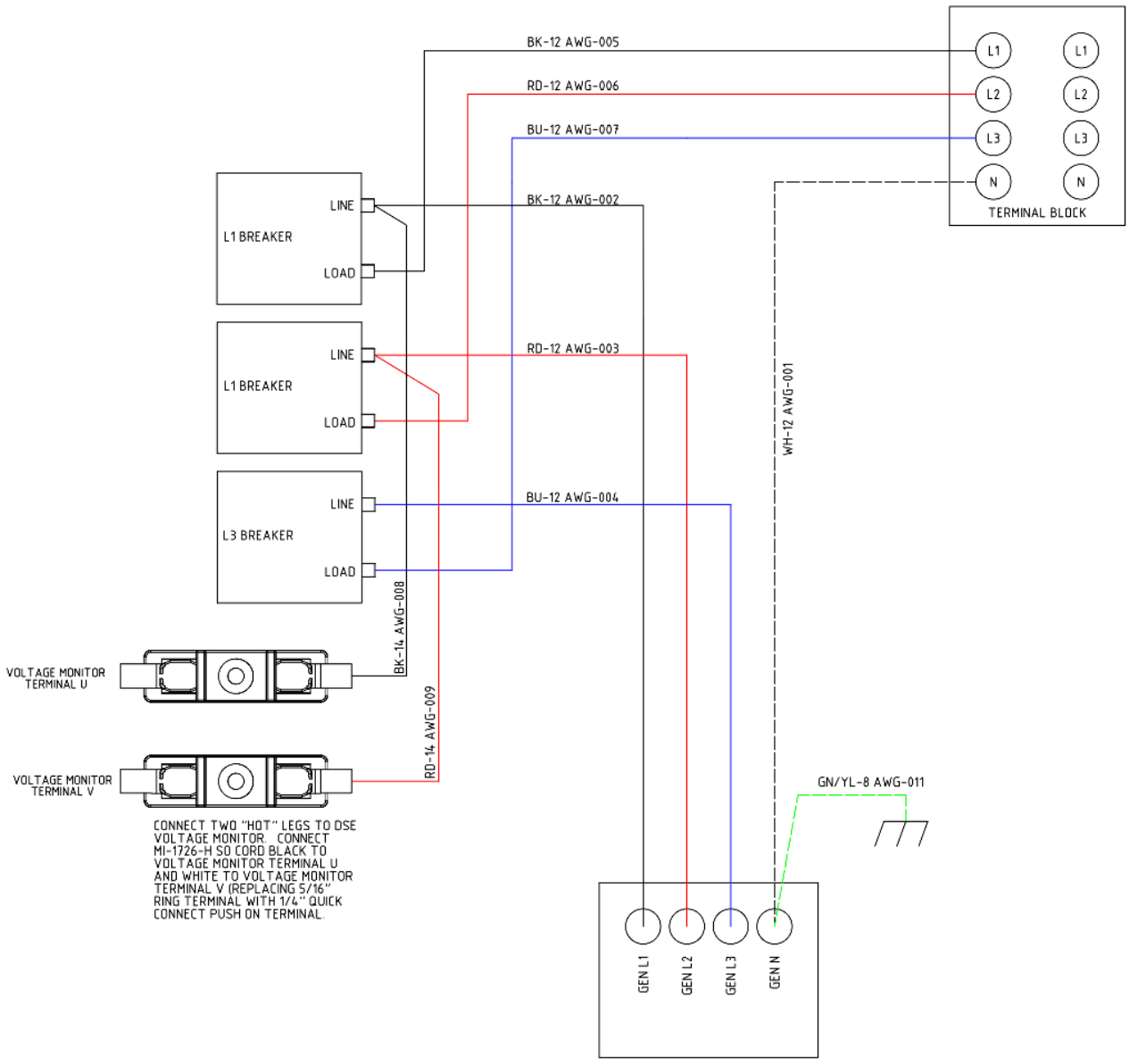

SUPPORTING DOCUMENTS