CATERPILLAR

Operation and Maintenance Manual

420F BACKHOE LOADER

S/N SKR00001-UP

FACTORY SERVICE & TECHNICAL DOCUMENTATION | WORKSHOP-MANUAL-PDF.COM

Foreword 2
Maintenance Section 6
Operation Section 206
Product Information Section 366
Reference Information Section 407
Safety Section 421
Warranty Section 490

Product: BACKHOE LOADER
Model: 420F BACKHOE LOADER SKR
Configuration: 420F Backhoe Loader SKR00001-UP (MACHINE) POWERED BY C4.4 Engine

Operation and Maintenance Manual
416F, 420F and 430F Backhoe Loaders

Media Number -SEBU8715-05 **Publication Date -01/07/2013** **Date Updated -22/04/2016**

s00037320

Foreword

Literature Information

This manual should be stored in the operator's compartment in the literature holder or seat back literature storage area.

This manual contains safety information, operation instructions, transportation information, lubrication information and maintenance information.

Some photographs or illustrations in this publication show details or attachments that can be different from your machine. Guards and covers might have been removed for illustrative purposes.

Continuing improvement and advancement of product design might have caused changes to your machine which are not included in this publication. Read, study and keep this manual with the machine.

Whenever a question arises regarding your machine, or this publication, please consult your Cat dealer for the latest available information.

Safety

The safety section lists basic safety precautions. In addition, this section identifies the text and locations of warning signs and labels used on the machine.

Read and understand the basic precautions listed in the safety section before operating or performing lubrication, maintenance and repair on this machine.

Operation

The operation section is a reference for the new operator and a refresher for the experienced operator. This section includes a discussion of gauges, switches, machine controls, attachment controls, transportation and towing information.

Photographs and illustrations guide the operator through correct procedures of checking, starting, operating and stopping the machine.

Operating techniques outlined in this publication are basic. Skill and techniques develop as the operator gains knowledge of the machine and its capabilities.

Maintenance

The maintenance section is a guide to equipment care. The Maintenance Interval Schedule (MIS) lists the items to be maintained at a specific service interval. Items without specific intervals are listed under the "When Required" service interval. The Maintenance Interval Schedule lists the page number for the step-by-step instructions required to accomplish the scheduled maintenance. Use the Maintenance Interval Schedule as an index or "one safe source" for all maintenance procedures.

Maintenance Intervals

Use the service hour meter to determine servicing intervals. Calendar intervals shown (daily, weekly, monthly, etc.) can be used instead of service hour meter intervals if they provide more convenient servicing schedules and approximate the indicated service hour meter reading. Recommended service should always be performed at the interval that occurs first.

Under extremely severe, dusty or wet operating conditions, more frequent lubrication than is specified in the maintenance intervals chart might be necessary.

Perform service on items at multiples of the original requirement. For example, at every 500 service hours or 3 months, also service those items listed under every 250 service hours or monthly and every 10 service hours or daily.

California Proposition 65 Warning

Diesel engine exhaust and some of its constituents are known to the State of California to cause cancer, birth defects, and other reproductive harm.

Battery posts, terminals and related accessories contain lead and lead compounds. **Wash hands after handling.**

Certified Engine Maintenance

Proper maintenance and repair is essential to keep the engine and machine systems operating correctly. As the heavy duty off-road diesel engine owner, you are responsible for the performance of the required maintenance listed in the Owner Manual, Operation and Maintenance Manual, and Service Manual.

It is prohibited for any person engaged in the business of repairing, servicing, selling, leasing, or trading engines or machines to remove, alter, or render inoperative any emission related device or element of design installed on or in an engine or machine that is in compliance with the regulations (40 CFR Part 89). Certain elements of the machine and engine such as the exhaust system, fuel system, electrical system, intake air system and cooling system may be emission related and should not be altered unless approved by Caterpillar.

Machine Capacity

Additional attachments or modifications may exceed machine design capacity which can adversely affect performance characteristics. Included would be stability and system certifications such as brakes, steering, and rollover protective structures (ROPS). Contact your Cat dealer for further information.

Cat Product Identification Number

Effective First Quarter 2001 the Cat Product Identification Number (PIN) has changed from 8 to 17 characters. In an effort to provide uniform equipment identification, Caterpillar and other construction equipment manufacturers are moving to comply with the latest version of the product identification numbering standard. Non-road machine PINs are defined by ISO 10261. The new PIN format will apply to all Cat machines and generator sets. The PIN plates and frame marking will display the 17 character PIN. The new format will look like the following:

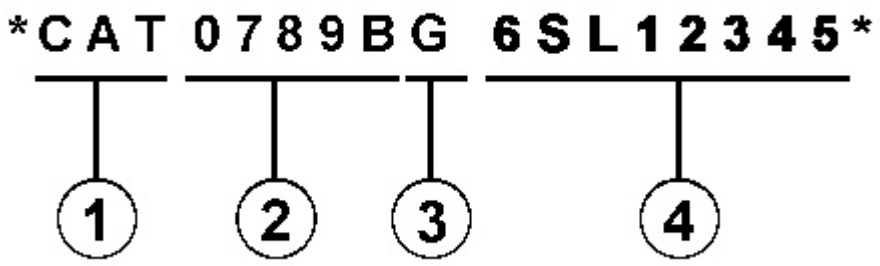

Illustration 1 g00751314

Where:

1. Caterpillar's World Manufacturing Code (characters 1-3)

2. Machine Descriptor (characters 4-8)

3. Check Character (character 9)

4. Machine Indicator Section (MIS) or Product Sequence Number (characters 10-17). These were previously referred to as the Serial Number.

Machines and generator sets produced before First Quarter 2001 will maintain their 8 character PIN format.

Components such as engines, transmissions, axles, etc. and work tools will continue to use an 8 character Serial Number (S/N).

This is the sample of the manual

Click on the download link for complete manual

Download Link

Copyright 1993 - 2023 Caterpillar Inc.
All Rights Reserved.
Private Network For SIS Licensees.

Sun Oct 1 12:25:00 UTC+0530 2023

Axle Breathers - CleanReplace 4
Backhoe Boom, Stick, Bucket, and Cylinder Bearings - Lubricate 6
Backhoe Control Console Latch - Lubricate 9
Backup Alarm - Test 11
Battery or Battery Cable - InspectReplace 12
Belts - InspectAdjustReplace 13
Braking System - Test 16
Bucket Cutting Edges - InspectReplace 19
Bucket Tips - InspectReplace 21
Cab Filter (Fresh Air) - CleanInspectReplace 24
Cab Filter (Recirculation) - CleanInspectReplace 27
Cab Interior - Clean 29
Capacities (Refill) 30
Cooling System Coolant (ELC) - Change 31
Cooling System Coolant Extender (ELC) - Add 35
Cooling System Coolant Level - Check 37
Cooling System Coolant Sample (Level 1) - Obtain 39
Cooling System Coolant Sample (Level 2) - Obtain 41
Cooling System Water Temperature Regulator - CleanReplace 43
Differential Oil (Front) - Change 45
Differential Oil (Rear) - Change 47
Differential Oil Level (Front) - Check 49
Differential Oil Level (Rear) - Check 50
Differential Oil Sample (Front) - Obtain 52
Differential Oil Sample (Rear) - Obtain 53
Drive Shaft Spline - Lubricate 54
Engine Air Filter Secondary Element - Replace 56
Engine Air Precleaner - Clean 59
Engine Compartment - Clean 61
Engine Crankcase Breather Element - Replace 62

Engine Oil and Filter - Change 67
Engine Oil Level - Check 70
Engine Oil Sample - Obtain 72
Extendable Stick Pads - InspectAdjust - If Equipped 73
Film (Product Identification) - Clean 83
Final Drive Oil (Front) - Change 86
Final Drive Oil (Rear) - Change 88
Final Drive Oil Level (Front) - Check 91
Final Drive Oil Level (Rear) - Check 93
Final Drive Oil Sample (Front) - Obtain 95
Final Drive Oil Sample (Rear) - Obtain 96
Fuel System Primary Filter (Water Separator) - Replace 97
Fuel System Secondary Filter - Replace 99
Fuel System Water Separator - Drain 102
Fuel Tank Water and Sediment - Drain 104
Fuses - Replace 106
Hydraulic Oil Sample - Obtain 109
Hydraulic System Oil - Change 111
Hydraulic System Oil Filter - Replace 115
Hydraulic System Oil Level - Check 119
Lift Cylinder Brace - Connect and Disconnect 121
Loader Bucket, Cylinder, and Linkage Bearings - Lubricate 126
Lubricant Viscosities - Fluids Recommendations 131
Maintenance Interval Schedule 139
Oil Filter - Inspect 143
Parking Brake - CheckAdjust 145
Quick Coupler - Clean 148
Quick Coupler - Lubricate - Hydraulic Pin Grabber Quick Coupler (If Equipped) 150
Quick Coupler - Lubricate - If Equipped 152

Radiator Core - Clean 155
Receiver Dryer (Refrigerant) - Replace 158
Rollover Protective Structure (ROPS) - Inspect 160
S·O·S Information 162
Seat Belt - Inspect 163
Seat Belt - Replace 165
Stabilizer and Cylinder Bearings - Lubricate 167
Swing Frame and Cylinder Bearings - Lubricate 168
System Pressure Release 170
Tire Inflation - Check 172
Tire Inflation Pressure Adjustment 173
Tire Inflation with Air 174
Tire Shipping Pressure 175
Transmission Magnetic Screen - Clean 177
Transmission Oil - Change 180
Transmission Oil Filter - Replace 184
Transmission Oil Level - Check 186
Transmission Oil Sample - Obtain 188
Welding on Machines and Engines with Electronic Controls 190
Wheel Bearings (Front) - Lubricate - Two-Wheel Drive 192
Wheel Nut Torque - Check 194
Window Washer Reservoir - Fill 196
Window Wipers - InspectReplace 198
Windows - Clean 199

Product: BACKHOE LOADER
Model: 420F BACKHOE LOADER SKR
Configuration: 420F Backhoe Loader SKR00001-UP (MACHINE) POWERED BY C4.4 Engine

Operation and Maintenance Manual
416F, 420F and 430F Backhoe Loaders
Media Number -SEBU8715-05 **Publication Date -01/07/2013** **Date Updated -22/04/2016**

i02436158

Axle Breathers - Clean/Replace

SMCS - 3278-070-BRE; 3278-510-BRE

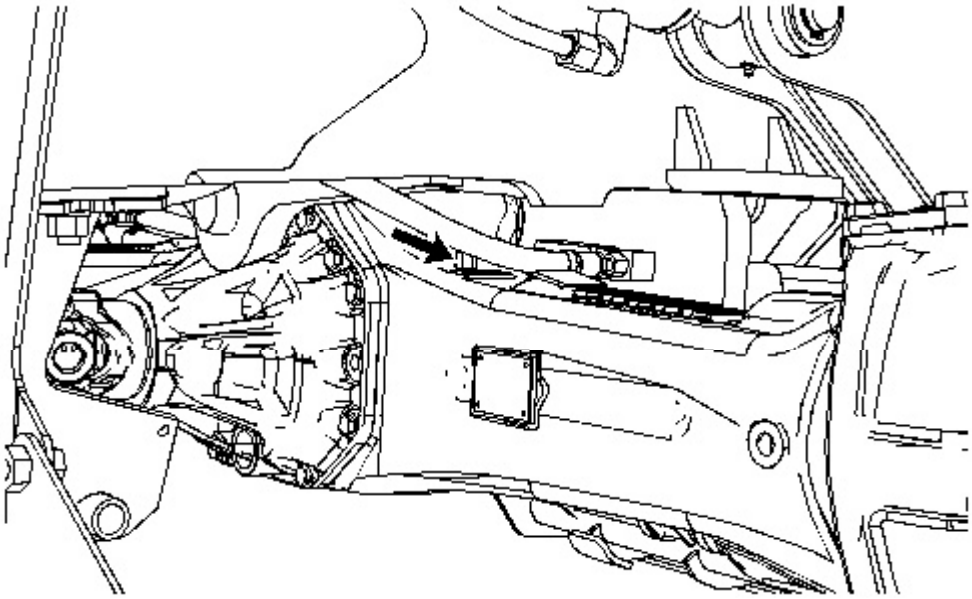

Illustration 1 g01216797

The front axle breather is located on the top right side of the differential housing.

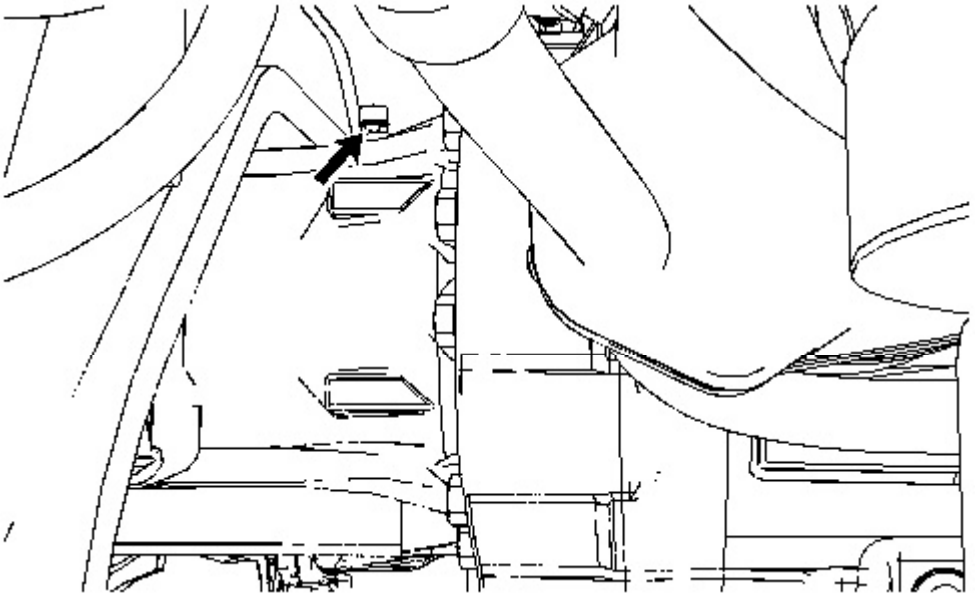

Illustration 2 g01216798

The rear axle breather is located to the left of the differential housing.

1. Clean the area around the breathers. Remove the breather from the front axle.
2. Wash the breather in clean nonflammable solvent. Wipe the breather dry and check the breather for damage.
3. Install the clean breather back into the axle. Replace the breather if the breather is damaged.

   Note: Make sure that the slot in the breather is parallel to the axle housing.

Copyright 1993 - 2023 Caterpillar Inc.
All Rights Reserved.
Private Network For SIS Licensees.

Product: BACKHOE LOADER
Model: 420F BACKHOE LOADER SKR
Configuration: 420F Backhoe Loader SKR00001-UP (MACHINE) POWERED BY C4.4 Engine

Operation and Maintenance Manual
416F, 420F and 430F Backhoe Loaders
Media Number -SEBU8715-05 **Publication Date -01/07/2013** **Date Updated -22/04/2016**

i02968284

Backhoe Boom, Stick, Bucket, and Cylinder Bearings - Lubricate

SMCS - 6501-086-BD; 6502-086-BD; 6503-086-BD; 6511-086-BD; 6512-086-BD; 6533-086-BD; 7562-086-BD

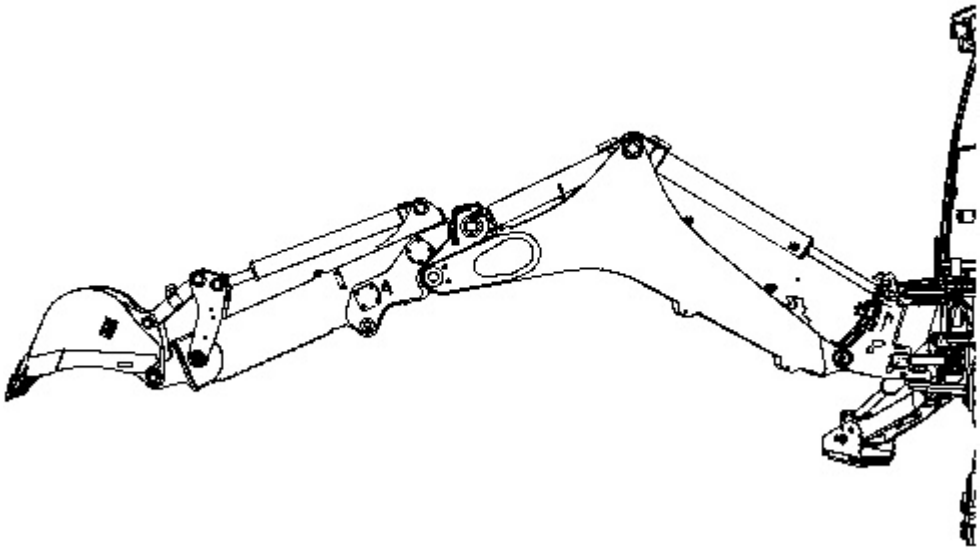

Illustration 1 g01194613

Position the backhoe into the service position that is shown above. Lower the bucket to the ground. Relieve the hydraulic pressure.

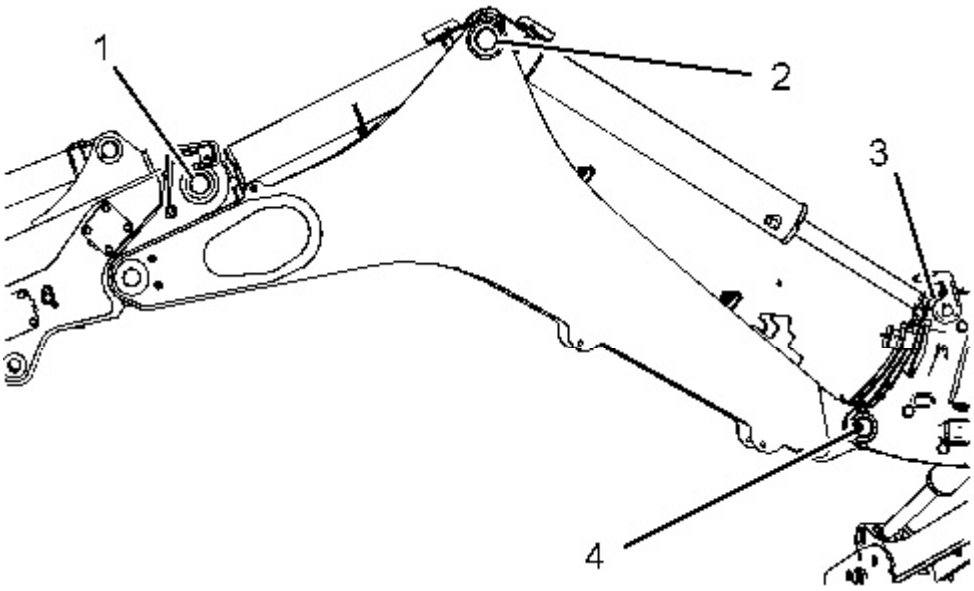

Illustration 2 g01194615

Apply lubricant to the grease fitting (1) for the rod end of the stick cylinder.

Apply lubricant to the grease fitting (2) for the head end of the boom cylinder and the head end of the stick cylinder.

Apply lubricant to the grease fitting (3) for the rod end of the boom cylinder.

Apply lubricant to the grease fitting (4) for the boom pivot. There is one grease fitting on each side of the machine.

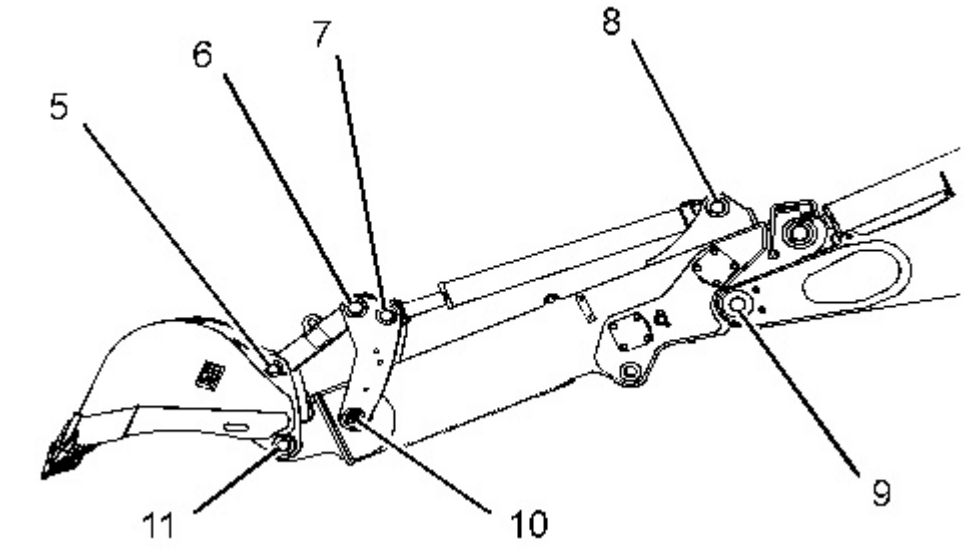

Illustration 3 g01194617

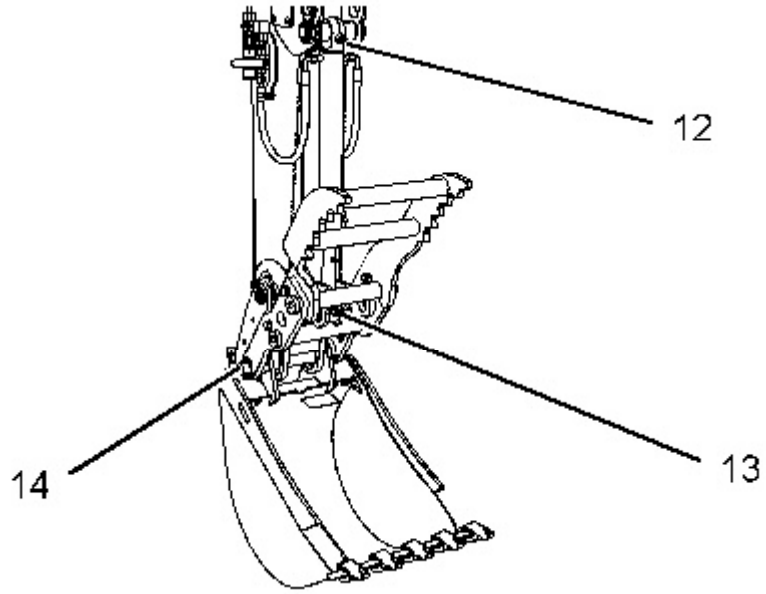

Illustration 4 g01491621

Apply lubricant to the grease fitting (5) for the bucket pivot pin.

Apply lubricant to the grease fitting (6) for the link.

Apply lubricant to the grease fitting (7) for the rod end of the bucket cylinder.

Apply lubricant to the grease fitting (8) for the head end of the bucket cylinder.

Apply lubricant to the grease fitting (9) for the pivot pin for the stick.

Apply lubricant to the grease fitting (10) for the pivot pin. There is one grease fitting on each side of the machine.

Apply lubricant to the grease fitting (11) for the pivot pin.

Apply lubricant to the grease fitting (12) for the head end of the thumb cylinder.

Apply lubricant to the grease fitting (13) for the rod end of the thumb cylinder.

Apply lubricant to the grease fitting (14) for the pivot pin on each side of the thumb.

There is a total of 21 grease fittings.

Copyright 1993 - 2023 Caterpillar Inc.
All Rights Reserved.
Private Network For SIS Licensees.
Sun Oct 1 12:44:39 UTC+0530 2023

Product: BACKHOE LOADER
Model: 420F BACKHOE LOADER SKR
Configuration: 420F Backhoe Loader SKR00001-UP (MACHINE) POWERED BY C4.4 Engine

Operation and Maintenance Manual
416F, 420F and 430F Backhoe Loaders
Media Number -SEBU8715-05 **Publication Date -01/07/2013** **Date Updated -22/04/2016**

i02915316

Backhoe Control Console Latch - Lubricate

SMCS - 5258-086-LX

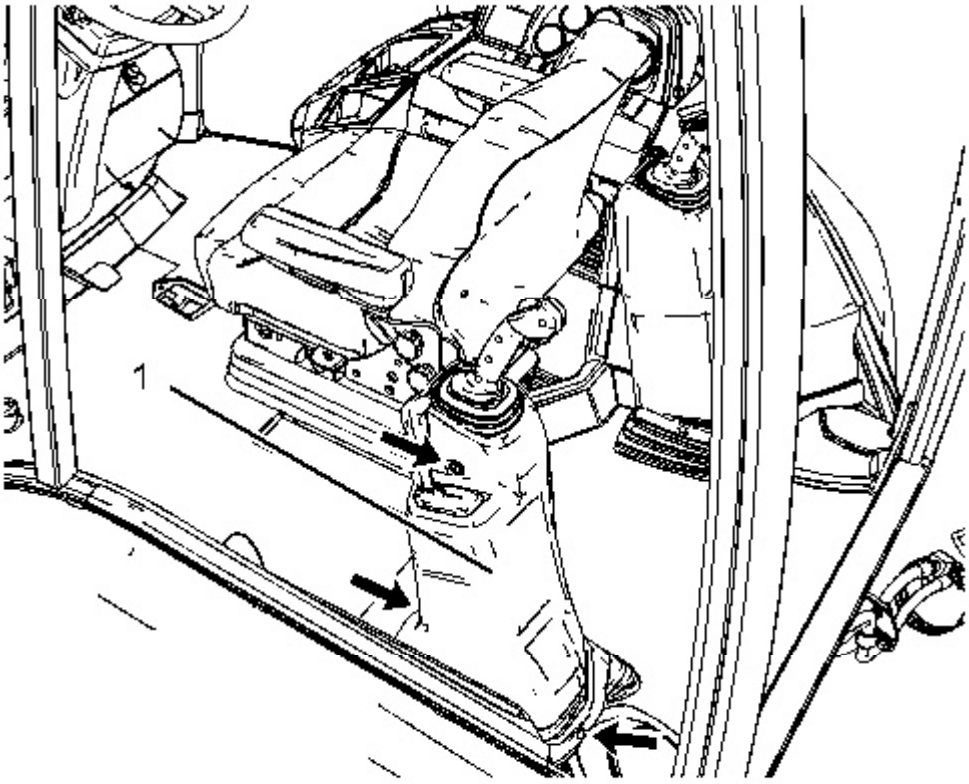

Illustration 1 g01450004

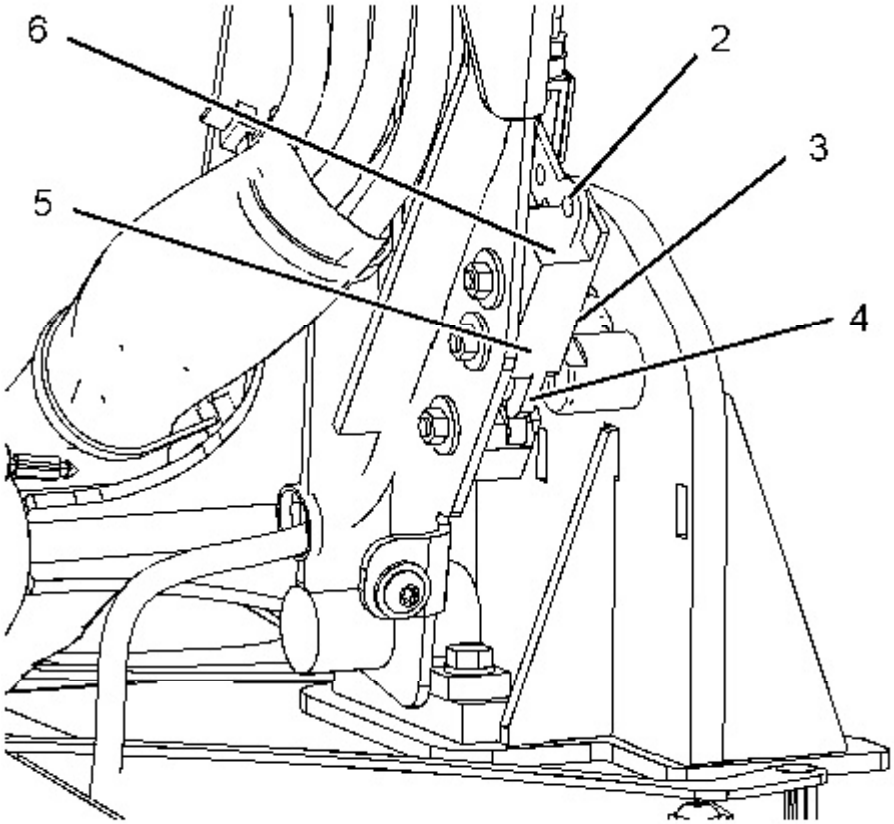

Illustration 2 g01450005

1. Remove the three bolts and remove the console (1).
2. Place the latch in the closed position.
3. Apply **242-6990** Lubricant onto the following:
    - Pivot for the release lever (2)
    - Axle for the catch (3)
    - Rotor axle (4)
    - Notches and catch for the rotor (5)
    - Contact for the release lever (6)
4. Cycle the latch two times.
5. Repeat steps 1 through 4.

Copyright 1993 - 2023 Caterpillar Inc.
All Rights Reserved.
Private Network For SIS Licensees.

Product: BACKHOE LOADER
Model: 420F BACKHOE LOADER SKR
Configuration: 420F Backhoe Loader SKR00001-UP (MACHINE) POWERED BY C4.4 Engine

Operation and Maintenance Manual
416F, 420F and 430F Backhoe Loaders

Media Number -SEBU8715-05 **Publication Date -01/07/2013** **Date Updated -22/04/2016**

i00080741

Backup Alarm - Test

SMCS - 7406-081

Turn the engine start switch key to ON in order to perform the test.

Apply the service brake. Move the transmission direction control lever to REVERSE position.

The backup alarm should immediately sound. The backup alarm will continue to sound until the transmission direction control lever is moved to the NEUTRAL position or to the FORWARD position.

Copyright 1993 - 2023 Caterpillar Inc.
All Rights Reserved.
Private Network For SIS Licensees.

Sun Oct 1 12:44:59 UTC+0530 2023

Product: BACKHOE LOADER
Model: 420F BACKHOE LOADER SKR
Configuration: 420F Backhoe Loader SKR00001-UP (MACHINE) POWERED BY C4.4 Engine

Operation and Maintenance Manual
416F, 420F and 430F Backhoe Loaders
Media Number -SEBU8715-05 **Publication Date -01/07/2013** **Date Updated -22/04/2016**

i01833495

Battery or Battery Cable - Inspect/Replace

SMCS - 1401-040; 1401-510; 1402-040; 1402-510

1. Turn the engine start switch to the OFF position. Turn all switches to the OFF position.
2. Disconnect the negative battery cable from the frame.

   Note: Do not allow the disconnected battery cable to contact the frame of the machine.
3. Disconnect the negative battery cable at the battery.
4. Inspect the battery terminals and inspect the battery cables. Keep the terminals clean and keep the terminals coated with petroleum jelly.
5. Perform the necessary repairs. Replace the cable or the battery, as needed.
6. Connect the negative battery cable at the battery.
7. Connect the battery cable to the frame of the machine.
8. Install the engine start switch key.

Copyright 1993 - 2023 Caterpillar Inc.
All Rights Reserved.
Private Network For SIS Licensees.

Product: BACKHOE LOADER
Model: 420F BACKHOE LOADER SKR
Configuration: 420F Backhoe Loader SKR00001-UP (MACHINE) POWERED BY C4.4 Engine

Operation and Maintenance Manual
416F, 420F and 430F Backhoe Loaders

Media Number -SEBU8715-05 **Publication Date -01/07/2013** **Date Updated -22/04/2016**

i06899518

Belts - Inspect/Adjust/Replace

SMCS - 1357-025; 1357-040; 1357-510

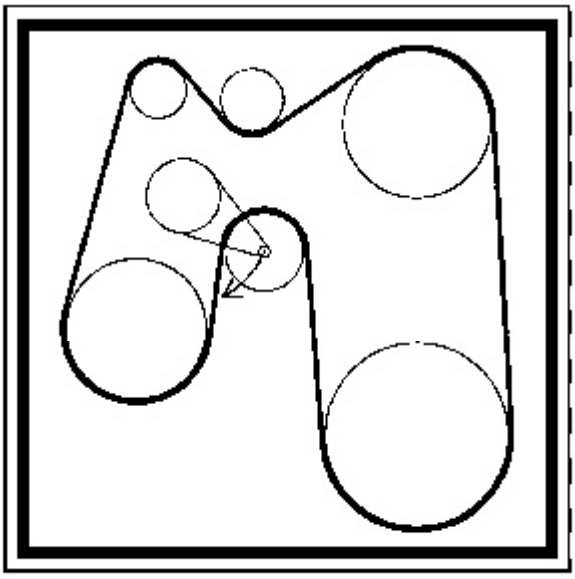

Illustration 1 g03507446
Belt Routing Film: Machines with A/C

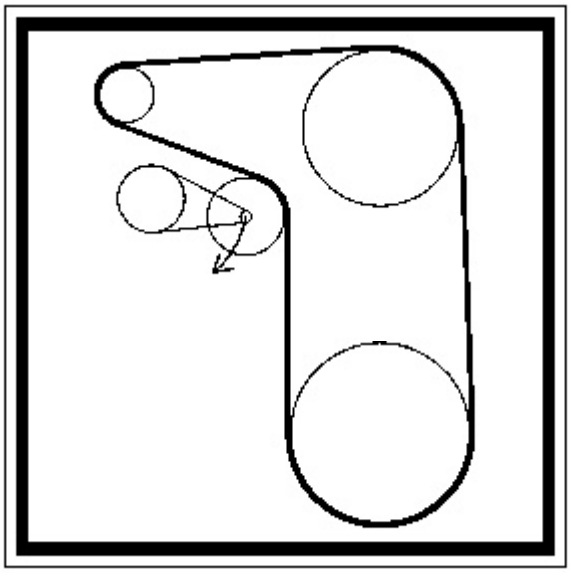

Illustration 2 g03518922

Belt Routing Film: Machines without A/C

If new belts are installed, check belt adjustment after 30 minutes of operation. For multiple belt drive applications, always replace the belts in matched sets. Replacing only one belt of a matched set will cause the new belt to carry more load because the older belts are stretched. The additional load on the new belt could cause the new belt to break.

1. Install the lift cylinder brace. Refer to Operation and Maintenance Manual, "Lift Cylinder Brace - Connect and Disconnect" for more information.
2. Remove the engine access panel on the left side of the machine.

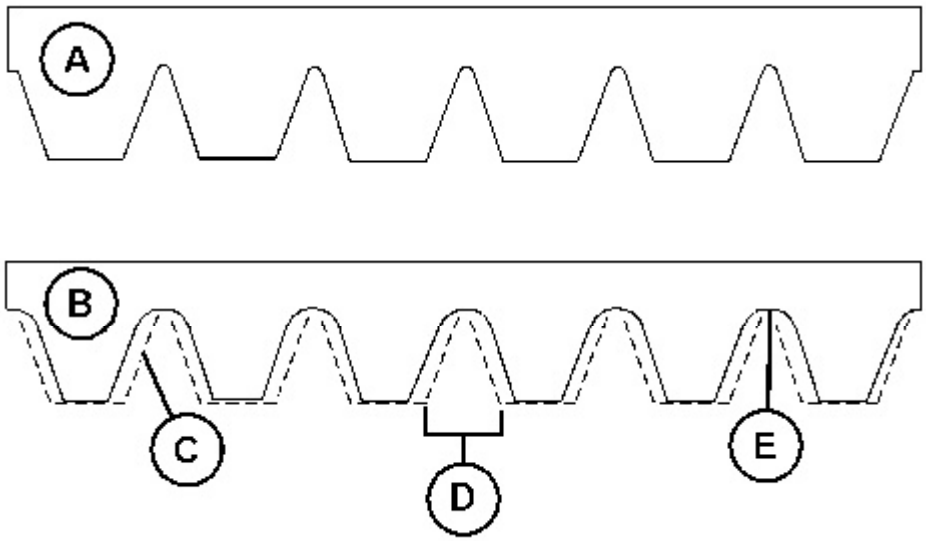

Illustration 3 g06114636

(A) New belt
(B) Worn belt

3. Inspect the condition of the serpentine belt. Over time the belt ribs will lose material (C). The space between the ribs will increase (D). The loss of material will cause the pulley sheave to contact the belt valley. This will lead to belt slippage and accelerated wear (E). Replace the belt if the belt is worn or frayed.

   Note: The serpentine belt is the self-adjusting type. There is no adjustment of the tension.

4. Close the engine access door.

Copyright 1993 - 2023 Caterpillar Inc.
All Rights Reserved.
Private Network For SIS Licensees.

Product: BACKHOE LOADER
Model: 420F BACKHOE LOADER SKR
Configuration: 420F Backhoe Loader SKR00001-UP (MACHINE) POWERED BY C4.4 Engine

Operation and Maintenance Manual
416F, 420F and 430F Backhoe Loaders

Media Number -SEBU8715-05 **Publication Date -01/07/2013** **Date Updated -22/04/2016**

i05877644

Braking System - Test

SMCS - 4251-081; 4267-081

Service Brake Holding Ability Test

Check the area around the machine. Make sure that the machine is clear of personnel and clear of obstacles.

Test the brakes on a dry, level surface.

Fasten the seat belt before you test the brakes.

The following test is used to determine if the service brake is functional. This test is not intended to measure the maximum brake holding effort. The brake holding effort that is required to sustain a machine at a specific engine rpm varies depending on the machine. The variations are the differences in the engine setting, in the power train efficiency, and in the brake holding ability, etc.

1. Start the engine. Raise the bucket slightly.
2. Apply the service brake. Release the parking brake.
3. Move the transmission control lever to THIRD SPEED FORWARD.
4. Gradually increase the engine speed to high idle. The machine should not move.

WARNING

If the machine begins to move, reduce the engine speed immediately and engage the parking brake.

5. Reduce the engine speed to low idle. Move the transmission to NEUTRAL. Engage the parking brake. Lower the bucket to the ground. Stop the engine.

NOTICE

If the machine moved while testing the brakes, contact your Caterpillar dealer. Have the dealer inspect and, if necessary, repair the service brake before returning the machine to operation.

Secondary Brake Holding Ability Test

Check the area around the machine. Make sure that the machine is clear of personnel and clear of obstacles.

Test the brakes on a dry, level surface.

Fasten the seat belt before you test the brakes.

The following tests are used to determine if the parking brake is functional. These tests are not intended to measure the maximum brake holding effort. The brake holding effort that is required to sustain a machine at a specific engine rpm varies depending on the machine. The variations are the differences in the engine setting, in the power train efficiency, and in the brake holding ability, etc.

1. Start the engine. Raise the bucket slightly.
2. Engage the parking brake.
3. Move the transmission control lever to THIRD SPEED FORWARD, then to NEUTRAL, then back to THIRD SPEED FORWARD.

   Note: The parking brake indicator light should come on and the parking brake alarm should sound if machine ground speed is above 6 km/h (3.7 mph) with the secondary brake still engaged.
4. Gradually increase the engine speed to high idle. The machine should not move.

WARNING

If the machine begins to move, reduce the engine speed immediately and apply the service brake pedal.

5. Reduce the engine speed. Move the transmission to NEUTRAL. Lower the bucket to the ground. Stop the engine.

NOTICE

If the machine moved while testing the brakes, contact your Caterpillar dealer.

Have the dealer inspect and, if necessary, repair the parking brakes before returning the machine to operation.

Copyright 1993 - 2023 Caterpillar Inc.
All Rights Reserved.
Private Network For SIS Licensees.

Product: BACKHOE LOADER
Model: 420F BACKHOE LOADER SKR
Configuration: 420F Backhoe Loader SKR00001-UP (MACHINE) POWERED BY C4.4 Engine

Operation and Maintenance Manual
416F, 420F and 430F Backhoe Loaders
Media Number -SEBU8715-05 **Publication Date -01/07/2013** **Date Updated -22/04/2016**

i01920076

Bucket Cutting Edges - Inspect/Replace

SMCS - 6801-040; 6801-510

WARNING

Personal injury or death can result from bucket falling.

Block the bucket before changing bucket cutting edges.

1. Raise the bucket. Place a block under the bucket.
2. Lower the bucket to the blocking.

   Do not block up the bucket too high. Block up the bucket so that the bucket is high enough to remove the cutting edges and the end bits.
3. Remove the bolts. Remove the cutting edge and the end bits.
4. Clean the contact surfaces.
5. Use the opposite side of the cutting edge, if this side is not worn.
6. Install a new cutting edge, if both edges are worn.
7. Install the bolts. Tighten the bolts to the specified torque.
8. Raise the bucket. Remove the blocks.
9. Lower the bucket to the ground.
10. After a few hours of operation, check the bolts for proper torque.

Copyright 1993 - 2023 Caterpillar Inc.
All Rights Reserved.
Private Network For SIS Licensees.

Sun Oct 1 12:45:41 UTC+0530 2023

Product: BACKHOE LOADER
Model: 420F BACKHOE LOADER SKR
Configuration: 420F Backhoe Loader SKR00001-UP (MACHINE) POWERED BY C4.4 Engine

Operation and Maintenance Manual
416F, 420F and 430F Backhoe Loaders
Media Number -SEBU8715-05 **Publication Date -01/07/2013** **Date Updated -22/04/2016**

i02540747

Bucket Tips - Inspect/Replace

SMCS - 6805-040; 6805-510

WARNING

Personal injury or death can result from the bucket falling.

Block the bucket before changing bucket tips.

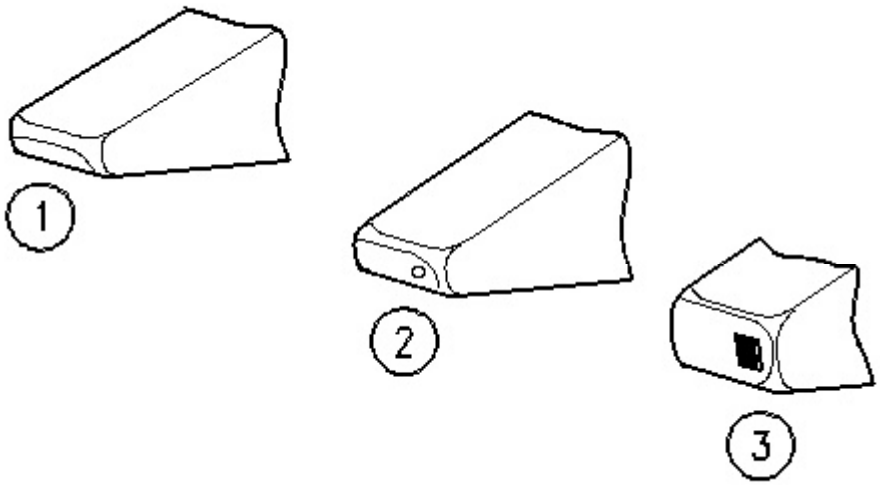

Illustration 1 g00101352
(1) This tip is usable. (2) This tip should be replaced. (3) This tip has been overworn.

Check the bucket tips for wear. If the bucket tip has a hole, replace the bucket tip.

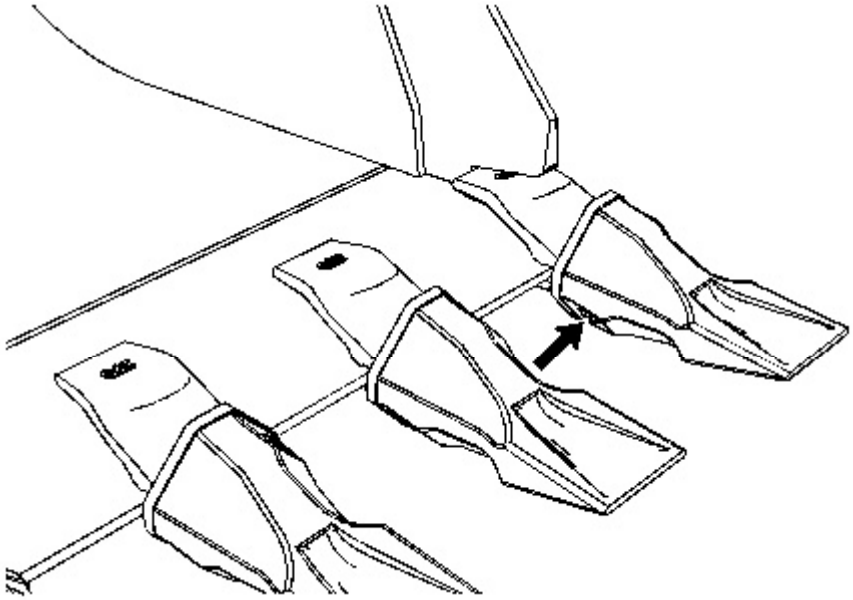

Illustration 2 g01272671

1. Drive the pin out of the bucket tip from the retainer side of the bucket tip. Remove the bucket tip and the retainer.

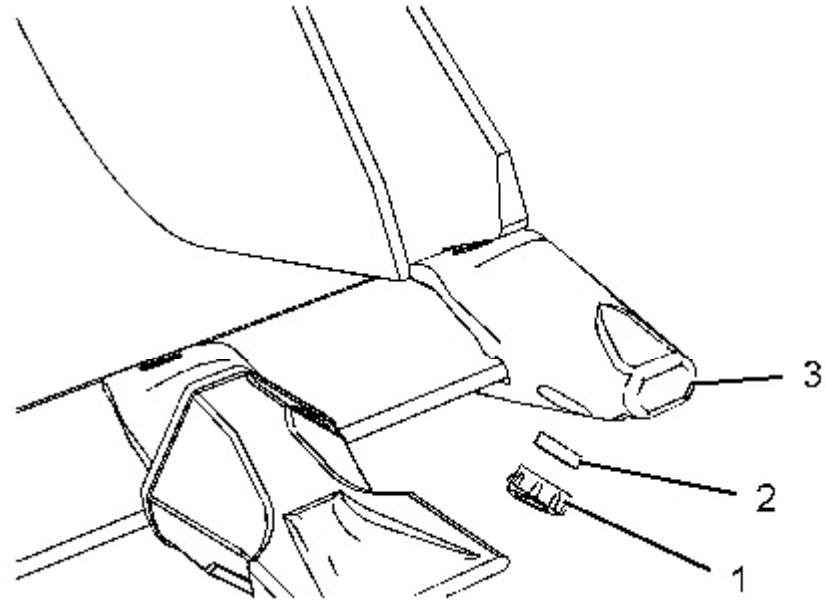

Illustration 3 g01272854

(1) Retaining washer
(2) Retainer
(3) Adapter

2. Clean the adapter and the pin.
3. Fit retainer (2) into retaining washer (1). Install this assembly into the groove that is in the side of adapter (3).

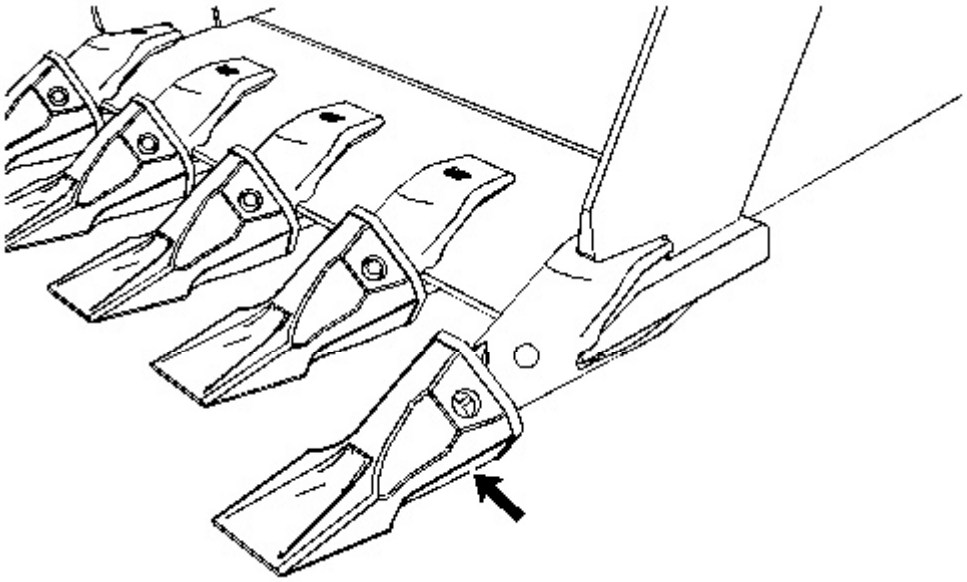

Illustration 4 g01272859

4. Install the new bucket tip or the rotated bucket tip onto the adapter. To allow greater penetration or less penetration, the bucket tip may be rotated by 180 degrees.
5. From the other side of the retainer, drive the pin through the bucket tip, the adapter, and the retainer.
6. After you drive the pin, make sure that the retainer fits snugly into the pin groove.

Copyright 1993 - 2023 Caterpillar Inc.
All Rights Reserved.
Private Network For SIS Licensees.
Sun Oct 1 12:46:08 UTC+0530 2023

This is the sample of the manual

Click on the download link for complete manual

Download Link