CATERPILLAR

Service Manual

226B SKID STEER LOADER

Printed by Heavy Equipment Manuals **Printed in U.S.A**
v2.20

Heavy Equipment Manuals

KENR6948-04 C1.5 and C2.2 Engines for Caterpillar Built Machines 2
RENR4893-03 216B, 216B2, 226B, 226B2, 232B, 232B2, 242B and 242B2 Skid Steer Loaders Engine Supplement 280
RENR4894-05 216B, 226B, 232B and 242B Skid Steer Loaders Power Train 385
RENR4898-03 216B, 216B2, 226B, 226B2, 232B, 232B2, 242B and 242B2 Skid Steer Loaders Machine Systems 544
SENR5006-04 3024C Engine for Caterpillar Built Machines 797
UENR3262-00 Seal Installation 1005

Alternator - Remove and Install - 55 Amp Alternator ____ 4
Alternator - Remove and Install - 65 Amp and 85 Amp Alternators ____ 7
Bearing Clearance - Check ____ 11
Camshaft - Assemble ____ 14
Camshaft - Disassemble ____ 16
Camshaft - Install ____ 18
Camshaft - Remove ____ 22
Connecting Rod Bearings - Install - Connecting rods in position ____ 26
Connecting Rod Bearings - Remove - Connecting rods in position ____ 29
Coolant Temperature Switch - Remove and Install ____ 31
Crankcase Breather - Remove and Install - Naturally Aspirated Engines ____ 34
Crankcase Breather - Remove and Install - Turbocharged Engines ____ 39
Crankshaft - Install ____ 44
Crankshaft - Remove ____ 48
Crankshaft Front Seal - Remove and Install ____ 51
Crankshaft Main Bearings - Install ____ 55
Crankshaft Main Bearings - Remove ____ 60
Crankshaft Pulley - Remove and Install ____ 64
Crankshaft Rear Seal - Remove and Install ____ 67
Crankshaft Wear Sleeve (Rear) - Remove and Install ____ 71
Cylinder Head - Install ____ 77
Cylinder Head - Remove ____ 82
Electric Starting Motor - Remove and Install ____ 87
Engine Oil Cooler - Remove and Install ____ 90
Engine Oil Line - Remove and Install ____ 94
Engine Oil Pan - Remove and Install ____ 99
Engine Oil Pressure Switch - Remove and Install ____ 103
Engine Oil Pump - Install ____ 108
Engine Oil Pump - Remove ____ 114
Engine Oil Relief Valve - Remove and Install ____ 119

Exhaust Manifold - Remove and Install 123
Fan - Remove and Install 127
Flywheel - Install 130
Flywheel - Remove 134
Flywheel Housing - Remove and Install - Engines with Flywheel Housing and Back Plate 137
Flywheel Housing - Remove and Install 143
Fuel Filter Base - Remove and Install 146
Fuel Injection Lines - Remove and Install 150
Fuel Injection Pump - Remove and Install 157
Fuel Injector - Remove and Install 163
Fuel Shutoff Solenoid - Remove and Install 167
Fuel Transfer Pump - Remove and Install - Electrical Fuel Transfer Pump 170
Fuel Transfer Pump - Remove and Install - Mechanical Fuel Transfer Pump 173
Glow Plugs - Remove and Install 177
Housing (Front) - Assemble 180
Housing (Front) - Disassemble 189
Housing (Front) - Install 196
Housing (Front) - Remove 200
Inlet and Exhaust Valve Springs - Remove and Install 203
Inlet and Exhaust Valves - Remove and Install 210
Lifter Group - Remove and Install 219
Pistons and Connecting Rods - Assemble 223
Pistons and Connecting Rods - Disassemble 228
Pistons and Connecting Rods - Install 234
Pistons and Connecting Rods - Remove 237
Rocker Shaft - Assemble 240
Rocker Shaft - Disassemble 243
Rocker Shaft and Pushrod - Install 246
Rocker Shaft and Pushrod - Remove 249

Turbocharger - Remove and Install 252
Valve Mechanism Cover - Remove and Install 258
V-Belts - Remove and Install 263
Water Pump - Remove and Install 266
Water Temperature Regulator - Remove and Install 272
Water Temperature Regulator Housing - Remove and Install 276

Product: SKID STEER LOADER
Model: 226B SKID STEER LOADER MJH
Configuration: 216B 226B 232B 242B Skid Steer Loader MJH00001-10574 (MACHINE) POWERED BY 3024C Engine

Disassembly and Assembly
C1.5 and C2.2 Engines for Caterpillar Built Machines
Media Number -KENR6948-04 **Publication Date -01/06/2015** **Date Updated -30/06/2016**

i02601956

Alternator - Remove and Install - 55 Amp Alternator

SMCS - 1405-010

Removal Procedure

Start By:

a. Remove the V-Belt. Refer to Disassembly and Assembly, "V-Belts - Remove and Install".

NOTICE

Keep all parts clean from contaminants.

Contaminants may cause rapid wear and shortened component life.

1. Turn the battery disconnect switch to the OFF position.
2. Make temporary identification marks on the connections of the harness assembly.

This is the sample of the manual

Click on the download link for complete manual

Download Link

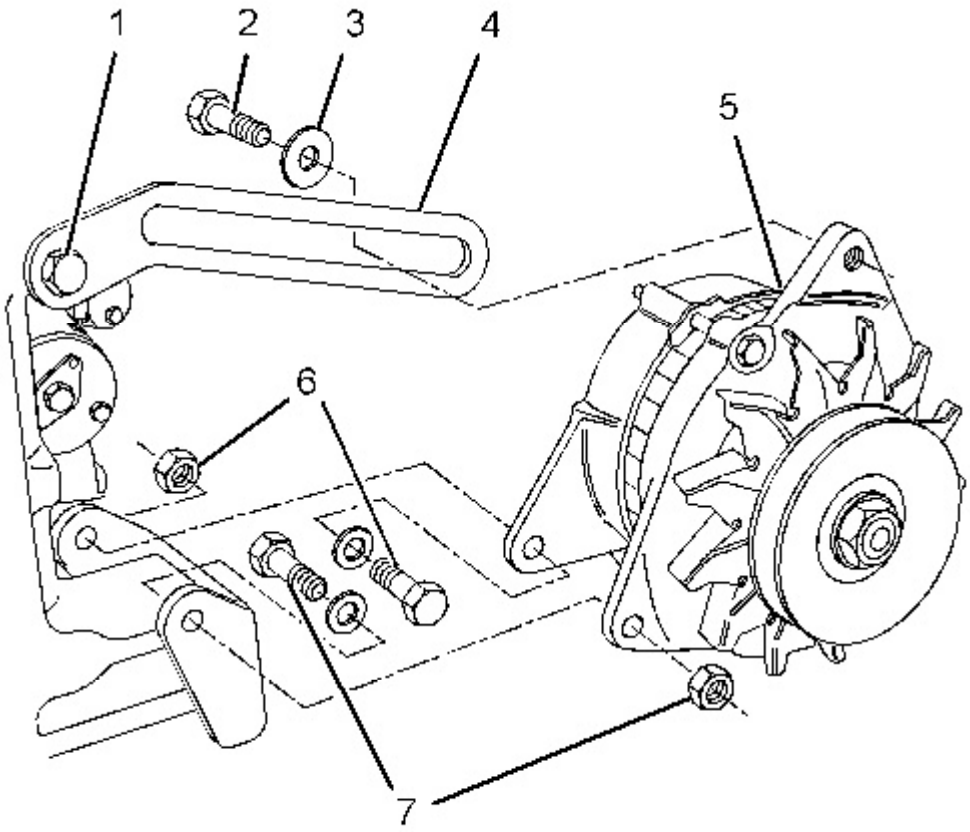

Illustration 1 g01308282

Typical example

3. Disconnect the harness assembly (not shown) from alternator (5).
4. Remove bolt (2) and washer (3) from alternator (5).
5. Remove fasteners (6) and (7) and remove alternator (5) from the mounting bracket.
6. If necessary, remove bolt (2) and remove adjusting link (4).

Installation Procedure

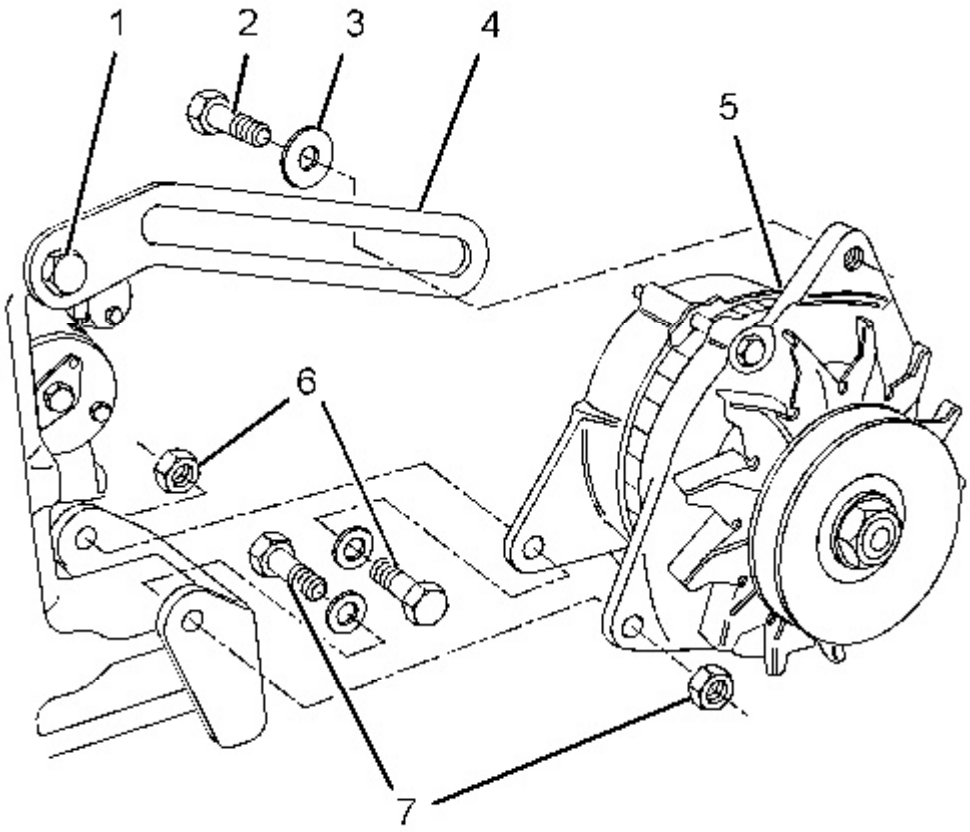

Illustration 2 g01308282

Typical example

1. If necessary, install adjusting link (4) and install bolt (1) finger tight.
2. Position alternator (5) on the mounting bracket.
3. Install fasteners (6) and (7) finger tight.
4. Install bolt (2) and washer (3) finger tight.
5. Install the V-Belt. Refer to Disassembly and Assembly, "V-Belts - Remove and Install".

   Note: Ensure that the alternator pulley is in alignment with the crankshaft pulley. Ensure that all fasteners are tightened.
6. Connect the harness assembly (not shown) to the alternator.
7. Turn the battery disconnect switch to the ON position.

Copyright 1993 - 2020 Caterpillar Inc.
All Rights Reserved.
Private Network For SIS Licensees.

Product: SKID STEER LOADER
Model: 226B SKID STEER LOADER MJH
Configuration: 216B 226B 232B 242B Skid Steer Loader MJH00001-10574 (MACHINE) POWERED BY 3024C Engine

Disassembly and Assembly
C1.5 and C2.2 Engines for Caterpillar Built Machines
Media Number -KENR6948-04 **Publication Date -01/06/2015** **Date Updated -30/06/2016**

i02601962

Alternator - Remove and Install - 65 Amp and 85 Amp Alternators

SMCS - 1405-010

Removal Procedure

Start By:

a. Remove the V-Belt. Refer to Disassembly and Assembly, "V-Belts - Remove and Install".

NOTICE

Keep all parts clean from contaminants.

Contaminants may cause rapid wear and shortened component life.

1. Turn the battery disconnect switch to the OFF position.
2. Make temporary identification marks on the connections of the harness assembly.

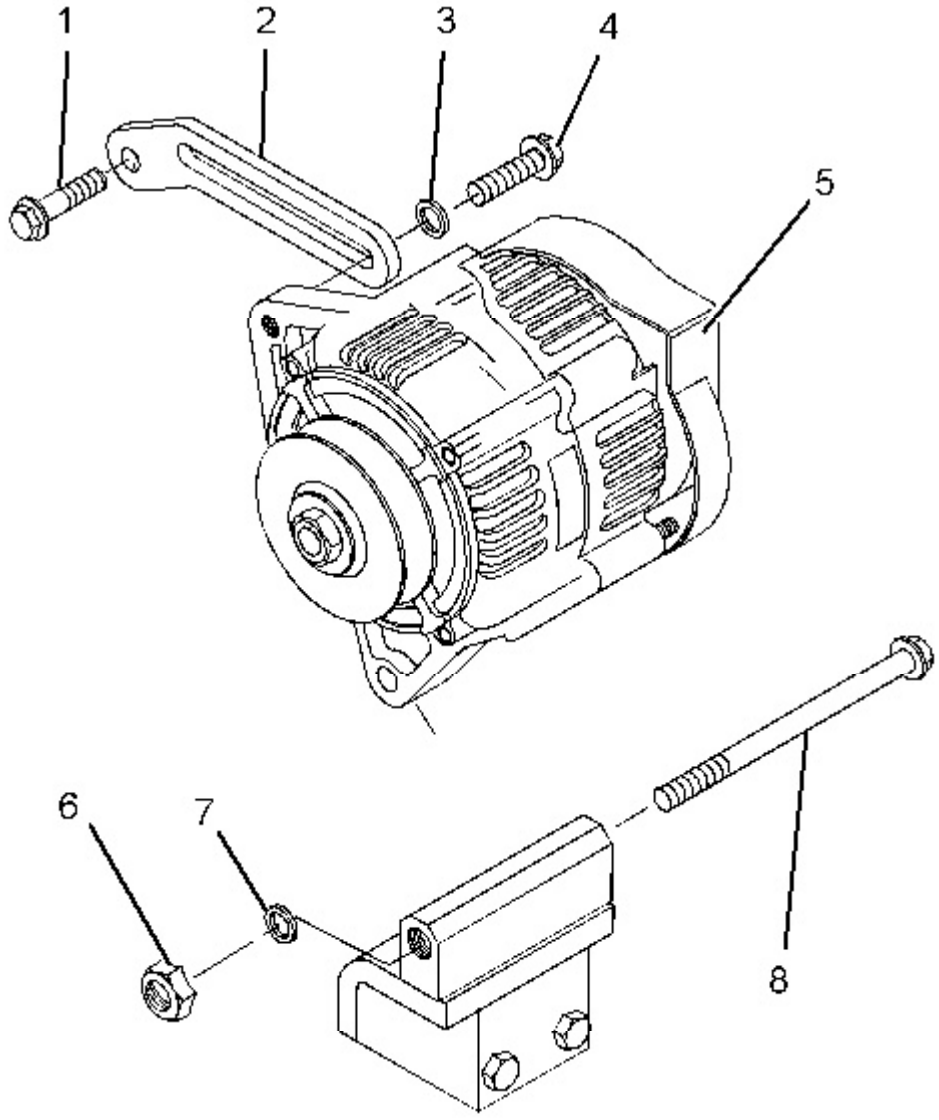

Illustration 1 g01308285

Typical example

3. Disconnect the harness assembly (not shown) from alternator (5).
4. Remove bolt (4) and washer (3) from alternator (5).
5. Remove washer (7) and nut (6). Remove bolt (8) and alternator (5) from the mounting bracket.
6. If necessary, remove bolt (1) and remove adjusting link (2).

Installation Procedure

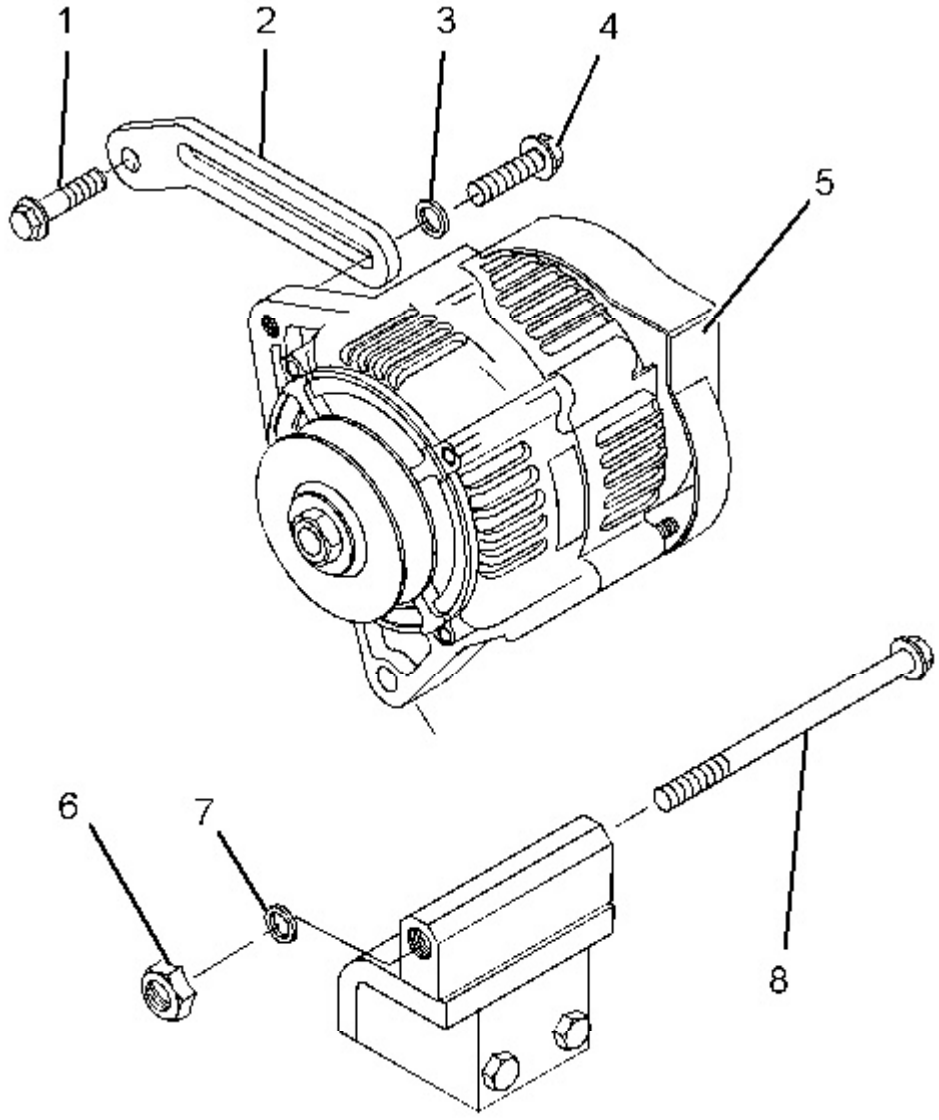

Illustration 2 g01308285

Typical example

1. If necessary, install adjusting link (2) and install bolt (1) finger tight.
2. Position alternator (5) on the mounting bracket.
3. Install bolt (8), washer (7) and nut (6) finger tight.
4. Install bolt (4) and washer (3) finger tight.
5. Install the V-Belt. Refer to Disassembly and Assembly, "V-Belts - Remove and Install".

   Note: Ensure that the alternator pulley is in alignment with the crankshaft pulley. Ensure that all fasteners are tightened.

6. Connect the harness assembly (not shown) to the alternator.
7. Turn the battery disconnect switch to the ON position.

Copyright 1993 - 2020 Caterpillar Inc.
All Rights Reserved.
Private Network For SIS Licensees.
Wed Nov 11 11:09:57 UTC+0530 2020

Product: SKID STEER LOADER
Model: 226B SKID STEER LOADER MJH
Configuration: 216B 226B 232B 242B Skid Steer Loader MJH00001-10574 (MACHINE) POWERED BY 3024C Engine

Disassembly and Assembly
C1.5 and C2.2 Engines for Caterpillar Built Machines
Media Number -KENR6948-04 **Publication Date -01/06/2015** **Date Updated -30/06/2016**

i02237832

Bearing Clearance - Check

SMCS - 1203-535; 1219-535

Measurement Procedure

Table 1

Required Tools			
Tool	**Part Number**	**Part Description**	**Qty**
A	198-9142	Plastic Gauge (Green) 0.025 to 0.076 mm (0.001 to 0.003 inch)	1
	198-9143	Plastic Gauge (Red) 0.051 to 0.152 mm (0.002 to 0.006 inch)	1
	198-9144	Plastic Gauge (Blue) 0.102 to 0.229 mm (0.004 to 0.009 inch)	1
	198-9145	Plastic Gauge (Yellow) 0.230 to 0.510 mm (0.009 to 0.020 inch)	1

NOTICE

Keep all parts clean from contaminants.

Contaminants may cause rapid wear and shortened component life.

Note: Caterpillar does not recommend the checking of the actual bearing clearances particularly on small engines. This is because of the possibility of obtaining inaccurate results and the possibility of damaging the bearing or the journal surfaces. Each Caterpillar engine bearing is quality checked for specific wall thickness.

Note: The measurements should be within specifications and the correct bearings should be used. If the crankshaft journals and the bores for the block and the rods were measured during disassembly, no further checks are necessary. However, if the technician still wants to measure the bearing clearances, Tooling (A) is an acceptable method. Tooling (A) is less accurate on journals with small diameters if clearances are less than 0.10 mm (0.004 inch).

NOTICE

Lead wire, shim stock or a dial bore gauge can damage the bearing surfaces.

The technician must be very careful to use Tooling (A) correctly. The following points must be remembered:

- Ensure that the backs of the bearings and the bores are clean and dry.
- Ensure that the bearing locking tabs are properly seated in the tab grooves.
- The crankshaft must be free of oil at the contact points of Tooling (A).

1. Put a piece of Tooling (A) on the crown of the bearing that is in the cap.

   Note: Do not allow Tooling (A) to extend over the edge of the bearing.

2. Use the correct torque-turn specifications in order to install the bearing cap. Do not use an impact wrench. Be careful not to dislodge the bearing when the cap is installed.

   Note: Do not turn the crankshaft when Tooling (A) is installed.

3. Carefully remove the cap, but do not remove Tooling (A). Measure the width of Tooling (A) while Tooling (A) is in the bearing cap or on the crankshaft journal. Refer to Illustration 1.

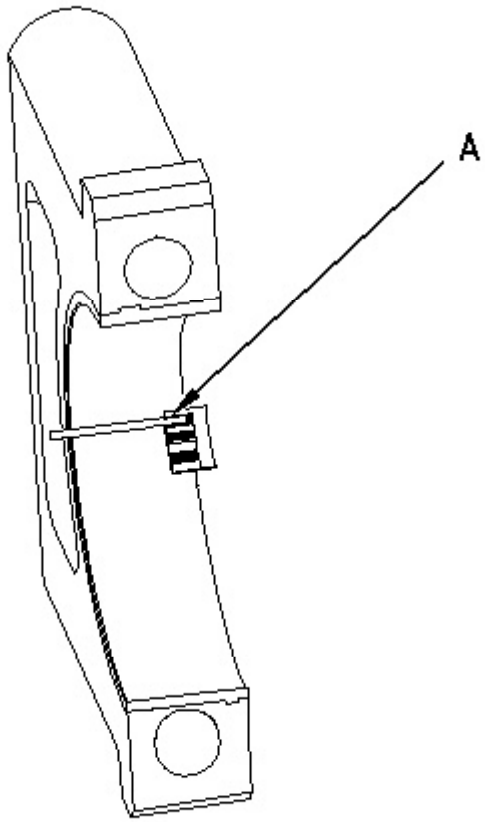

Illustration 1 g00953605

Typical Example

4. Remove all of Tooling (A) before you install the bearing cap.

   Note: When Tooling (A) is used, the readings can sometimes be unclear. For example, all parts of Tooling (A) are not the same width. Measure the major width in order to ensure that the parts are within the specification range. Refer to Specifications Manual, "Connecting Rod Bearing Journal" and Specifications Manual, "Main Bearing Journal" for the correct clearances.

Copyright 1993 - 2020 Caterpillar Inc.
All Rights Reserved.
Private Network For SIS Licensees.
Wed Nov 11 11:08:37 UTC+0530 2020

Product: SKID STEER LOADER
Model: 226B SKID STEER LOADER MJH
Configuration: 216B 226B 232B 242B Skid Steer Loader MJH00001-10574 (MACHINE) POWERED BY 3024C Engine

Disassembly and Assembly
C1.5 and C2.2 Engines for Caterpillar Built Machines
Media Number -KENR6948-04 **Publication Date -01/06/2015** **Date Updated -30/06/2016**

i02601967

Camshaft - Assemble

SMCS - 1210-016

Assembly Procedure

NOTICE

Keep all parts clean from contaminants.

Contaminants may cause rapid wear and shortened component life.

1. Ensure that all components of the camshaft assembly are clean and free from damage.

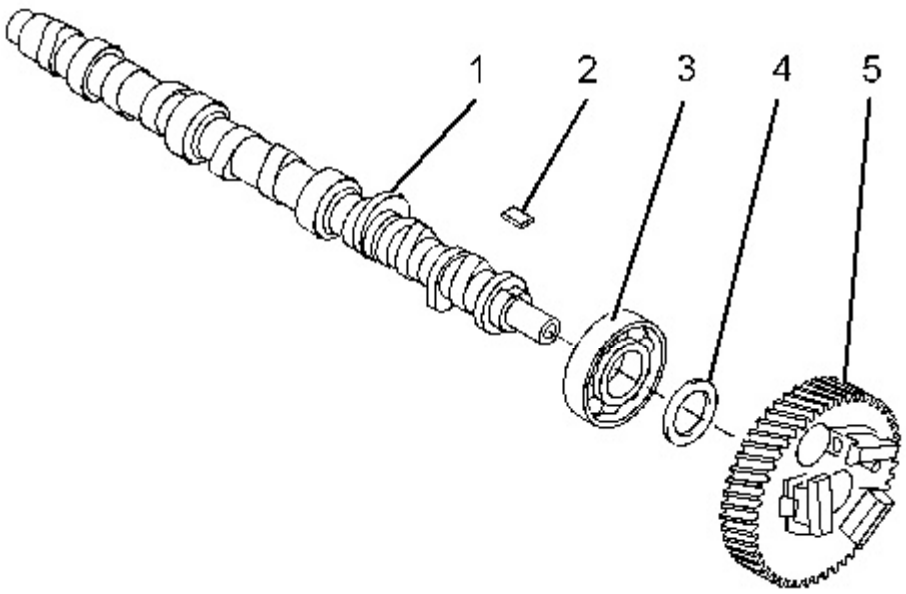

Illustration 1 g01326129

Typical example

2. Lubricate the nose of camshaft (1) with clean engine oil. Use a suitable press to install bearing (3) to the camshaft.

   Note: Ensure that the bearing is installed in the correct orientation. The camshaft bearing should be pressed squarely onto the camshaft or damage to the bearing may occur. Do not press on the outer race of the bearing.

3. Install spacer (4) and woodruff key (2) to camshaft (1).

4. Align gear (5) with woodruff key (2). Use a suitable press to install the gear to the nose of camshaft (1).

   Note: The gear should be positioned on a suitable support in order to prevent damage to the governor flyweights during installation.

End By:

a. Install the camshaft assembly. Refer to Disassembly and Assembly, "Camshaft - Install".

Copyright 1993 - 2020 Caterpillar Inc.
All Rights Reserved.
Private Network For SIS Licensees.
Wed Nov 11 11:05:46 UTC+0530 2020

Product: SKID STEER LOADER
Model: 226B SKID STEER LOADER MJH
Configuration: 216B 226B 232B 242B Skid Steer Loader MJH00001-10574 (MACHINE) POWERED BY 3024C Engine

Disassembly and Assembly
C1.5 and C2.2 Engines for Caterpillar Built Machines
Media Number -KENR6948-04 **Publication Date -01/06/2015** **Date Updated -30/06/2016**

i02601970

Camshaft - Disassemble

SMCS - 1210-015

Disassembly Procedure

Table 1

Required Tools			
Tool	**Part Number**	**Part Name**	**Qty**
A	1P-2320	Combination Puller	1

Start By:

a. Remove the camshaft assembly. Refer to Disassembly and Assembly, "Camshaft - Remove".

NOTICE

Keep all parts clean from contaminants.

Contaminants may cause rapid wear and shortened component life.

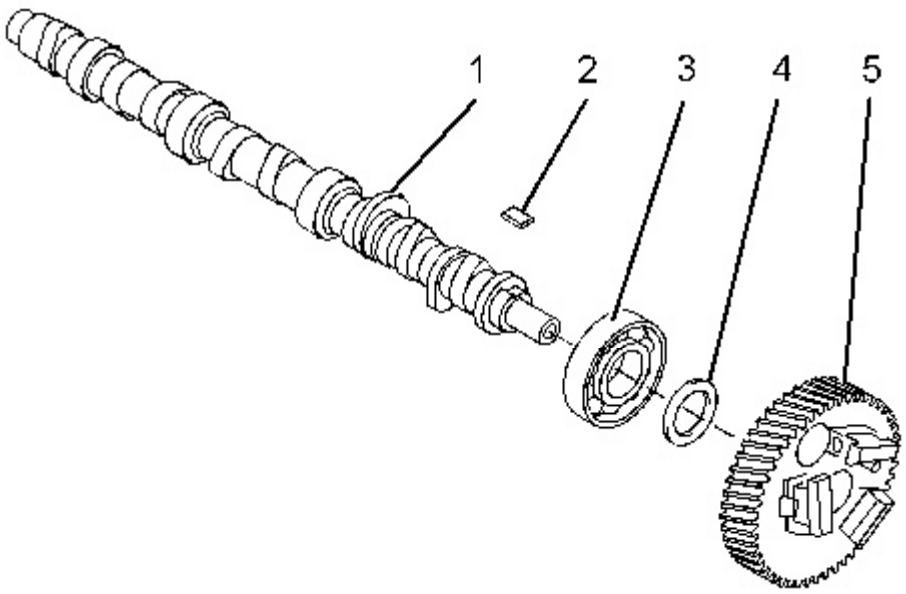

Illustration 1 g01326129

Typical example

1. Use Tooling (A) to remove gear (5) from camshaft (1).

   Note: The gear should be positioned on a suitable support in order to prevent damage to the governor flyweights during disassembly.

2. Remove spacer (4) and woodruff key (2) from camshaft (1).

3. Use Tooling (A) to remove bearing (3) from camshaft (1).

   Note: Identify the orientation of the bearing for installation.

Copyright 1993 - 2020 Caterpillar Inc.
All Rights Reserved.
Private Network For SIS Licensees.
Wed Nov 11 11:05:33 UTC+0530 2020

Product: SKID STEER LOADER
Model: 226B SKID STEER LOADER MJH
Configuration: 216B 226B 232B 242B Skid Steer Loader MJH00001-10574 (MACHINE) POWERED BY 3024C Engine

Disassembly and Assembly
C1.5 and C2.2 Engines for Caterpillar Built Machines
Media Number -KENR6948-04 **Publication Date -01/06/2015** **Date Updated -30/06/2016**

i06721482

Camshaft - Install

SMCS - 1210-012

Installation Procedure

NOTICE

Keep all parts clean from contaminants.

Contaminants may cause rapid wear and shortened component life.

1. Ensure that the assembly of the camshaft is clean and free from damage.
2. Lubricate the bearings of the camshaft with clean engine oil.

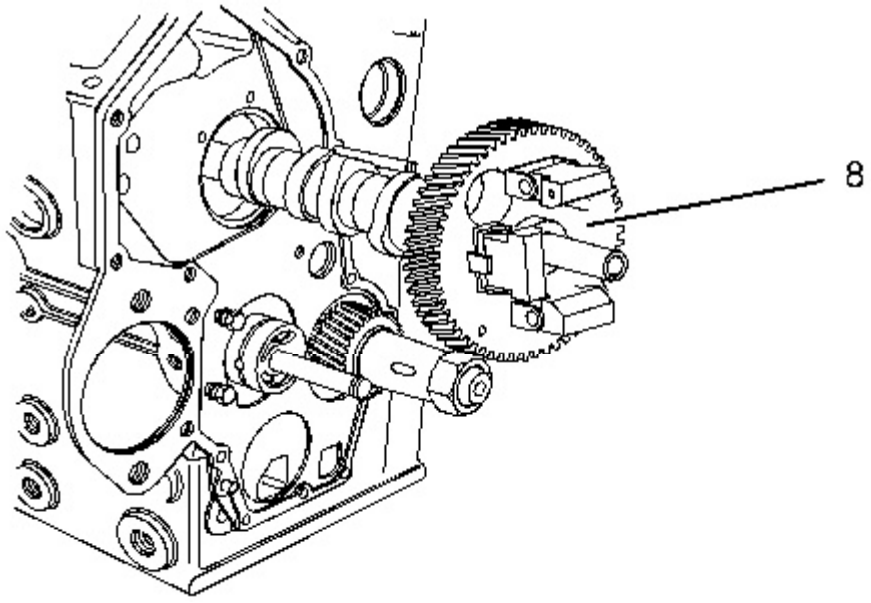

Illustration 1 g01311416

Typical example

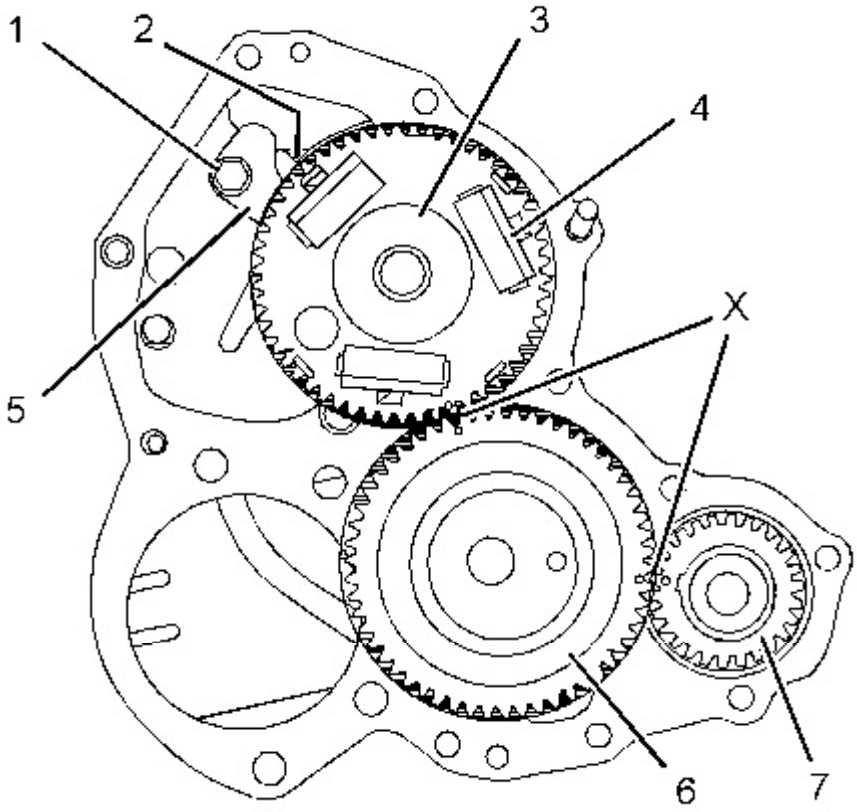

Illustration 2 g01311407

Typical example

3. Carefully install camshaft assembly (8) into the cylinder block. Ensure that timing marks (X) are aligned on the following gears:
   - Crankshaft gear (7)
   - Camshaft gear (4)
   - Idler gear (6)

   Note: Do not damage the lobes of the camshaft or the camshaft bearings.

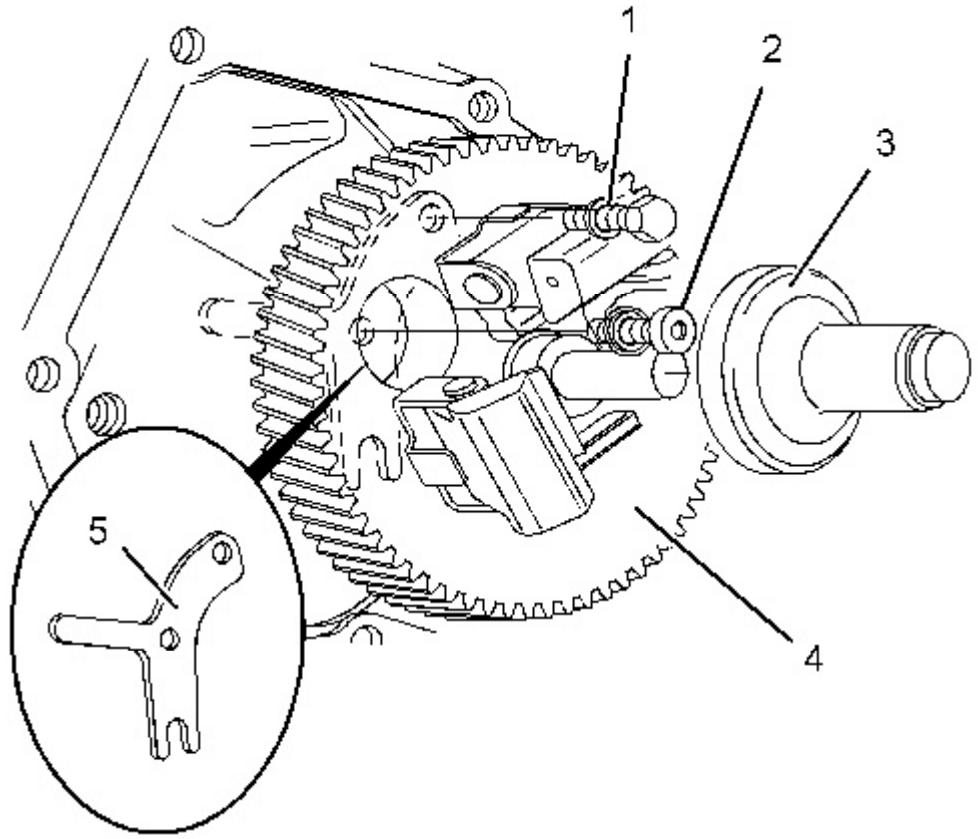

Illustration 3 g01311411

Typical example

4. Place camshaft retainer (5) in position. Align the holes in the retainer with the holes in the cylinder block.
5. Rotate camshaft gear (4) to align the access hole in the camshaft gear with the hole for fastener (2).

Install bolt (2) and tighten to a torque of 10 N·m (89 lb in). Rotate camshaft gear (4) to align the access hole in the camshaft gear with the hole for bolt (1). Install bolt (1) and tighten to a torque of 10 N·m (89 lb in).

6. Install slider (3) to camshaft gear (4).
7. If the engine is equipped with a mechanical fuel transfer pump, install the fuel transfer pump. Refer to Disassembly and Assembly, "Fuel Transfer Pump - Remove and Install".

End By:

a. Install the lifters. Refer to Disassembly and Assembly, "Lifter Group- Remove and Install".

b. Install the front housing. Refer to Disassembly and Assembly, "Housing (Front) - Install".

Copyright 1993 - 2020 Caterpillar Inc.
All Rights Reserved.
Private Network For SIS Licensees.
Wed Nov 11 11:05:56 UTC+0530 2020

Product: SKID STEER LOADER
Model: 226B SKID STEER LOADER MJH
Configuration: 216B 226B 232B 242B Skid Steer Loader MJH00001-10574 (MACHINE) POWERED BY 3024C Engine

Disassembly and Assembly
C1.5 and C2.2 Engines for Caterpillar Built Machines
Media Number -KENR6948-04 **Publication Date -01/06/2015** **Date Updated -30/06/2016**

i06721478

Camshaft - Remove

SMCS - 1210-011

Removal Procedure

Start By:

a. Remove the lifters. Refer to Disassembly and Assembly, "Lifter Group - Remove and Install".

b. Remove the front housing. Refer to Disassembly and Assembly, "Housing (Front) - Remove".

NOTICE

Keep all parts clean from contaminants.

Contaminants may cause rapid wear and shortened component life.

NOTICE

Care must be taken to ensure that fluids are contained during performance of inspection, maintenance, testing, adjusting and repair of the product. Be prepared to collect the fluid with suitable containers before opening any compartment or disassembling any component containing fluids.

Dispose of all fluids according to local regulations and mandates.

1. If the engine is equipped with a mechanical fuel transfer pump, remove the fuel transfer pump. Refer to Disassembly and Assembly, "Fuel Transfer Pump - Remove and Install".

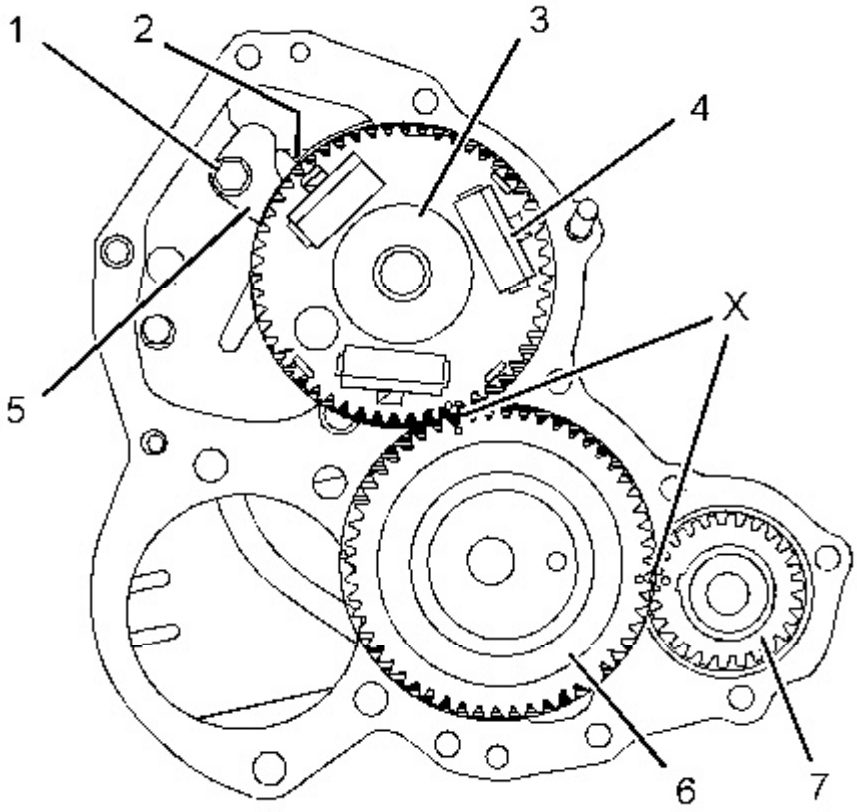

Illustration 1 g01311407

Typical example

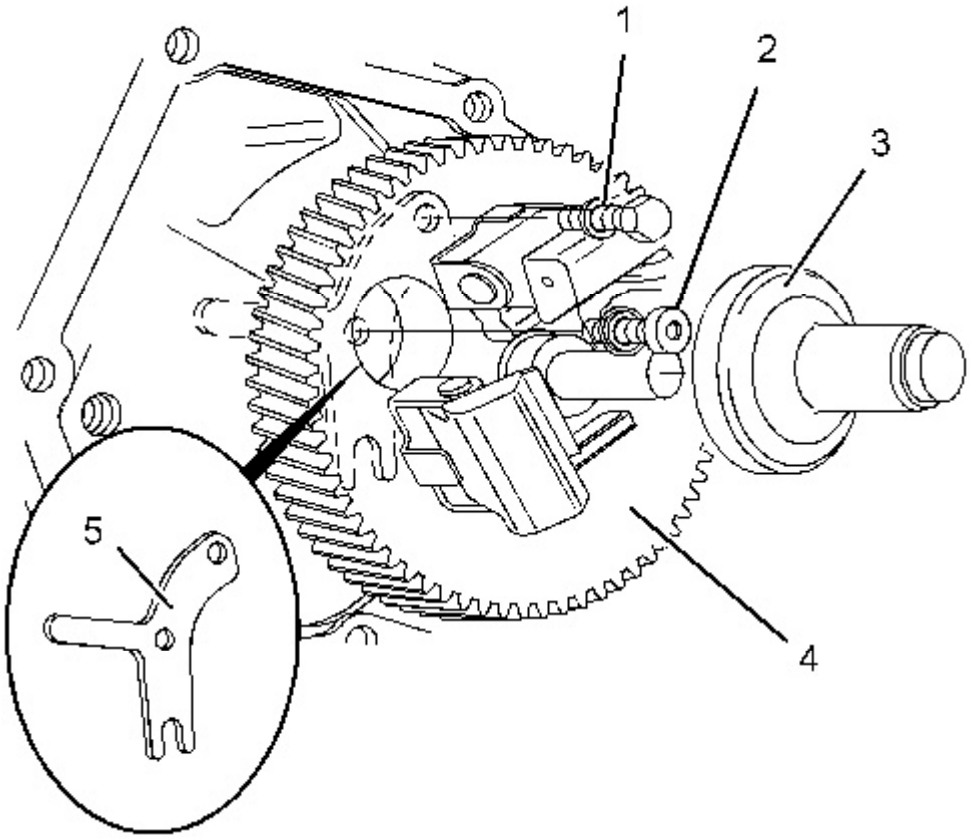

Illustration 2 g01311411

Typical example

2. Remove slider (3) from camshaft gear (4).
3. Rotate camshaft gear (4) to align the access hole in the camshaft gear with fastener (2).

   Remove bolt (2). Rotate camshaft gear (4) to align the access hole in the camshaft gear with bolt (1). Remove bolt (1).
4. Remove camshaft retainer (5).
5. Rotate the crankshaft until timing marks (X) are aligned on the following gears:
   - Crankshaft gear (7)
   - Camshaft gear (4)
   - Idler gear (6)

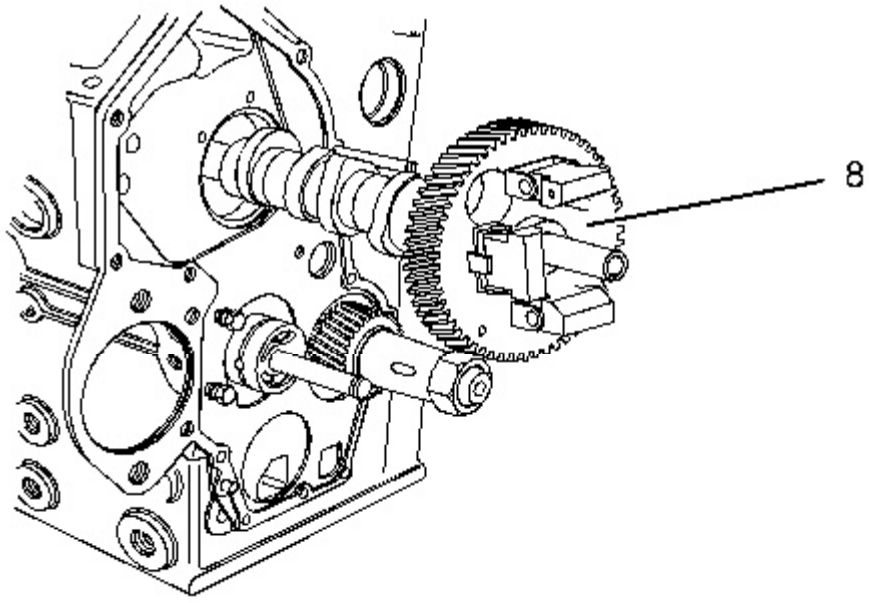

Illustration 3 g01311416

Typical example

6. Carefully remove camshaft assembly (8) from the cylinder block.

   Note: Ensure that the lobes of the camshaft and the camshaft bearings are not damaged.

Copyright 1993 - 2020 Caterpillar Inc.
All Rights Reserved.
Private Network For SIS Licensees.
Wed Nov 11 11:05:21 UTC+0530 2020

Product: SKID STEER LOADER
Model: 226B SKID STEER LOADER MJH
Configuration: 216B 226B 232B 242B Skid Steer Loader MJH00001-10574 (MACHINE) POWERED BY 3024C Engine

Disassembly and Assembly
C1.5 and C2.2 Engines for Caterpillar Built Machines
Media Number -KENR6948-04 **Publication Date -01/06/2015** **Date Updated -30/06/2016**

i06721485

Connecting Rod Bearings - Install - Connecting rods in position

SMCS - 1219-012

Installation Procedure

NOTICE

Keep all parts clean from contaminants.

Contaminants may cause rapid wear and shortened component life.

1. Inspect the pins of the crankshaft for damage. If the crankshaft is damaged, replace the crankshaft or recondition the crankshaft. Refer to Disassembly and Assembly, "Crankshaft - Remove" and Disassembly and Assembly, "Crankshaft - Install". Ensure that the connecting rod bearings are clean and free from wear or damage. If necessary, replace the connecting rod bearings.

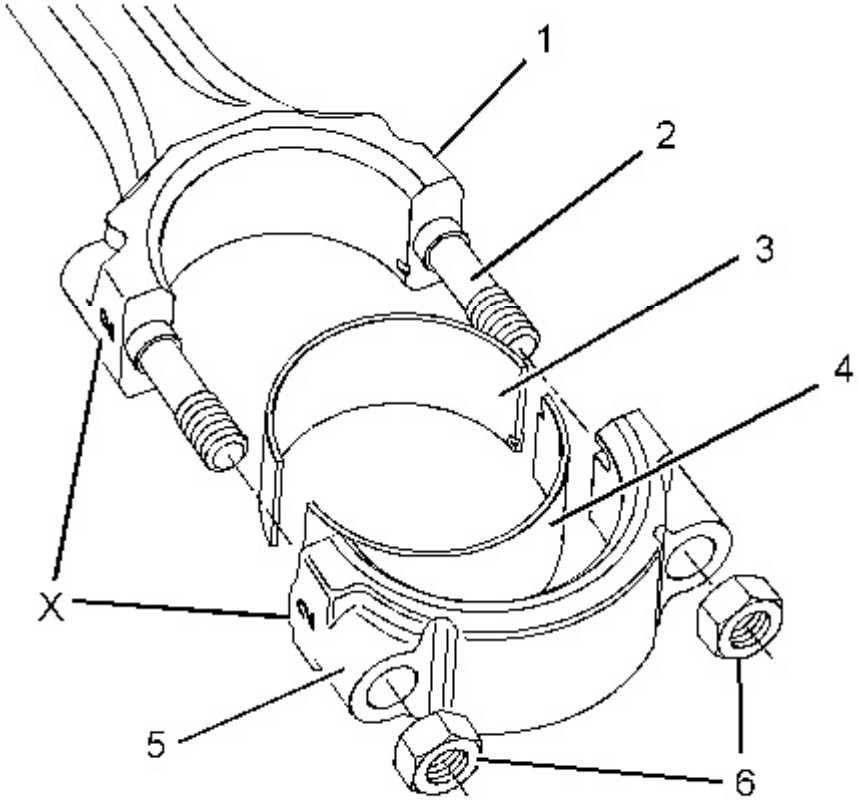

Illustration 1 g01317759

Typical example

2. Clean the bearing surface of connecting rod (1) and connecting rod cap (5). Ensure that number (X) on connecting rod cap (5) aligns with number (X) on connecting rod (1).
3. Install upper connecting rod bearing (3) to connecting rod (1). Lubricate the bearing surface of the connecting rod bearing with clean engine oil.
4. Carefully pull connecting rod (1) against the crankshaft pin.

   Note: Use tape or rubber tubing on connecting rod bolts (2) to protect the crankshaft journals. The sharp edges of the connecting rod bolts could damage the crankshaft journals.
5. Clean the connecting rod cap. Install lower connecting rod bearing (4) to connecting rod cap (5).
6. Lubricate the pin of the crankshaft and lubricate lower connecting rod bearing (3) with clean engine oil.

NOTICE

When the connecting rod caps are installed, ensure that the identification marks are aligned.

---

7. Install connecting rod cap (5).
8. Install nuts (4). Tighten nuts to a torque of 52 N·m (38 lb ft).
9. Ensure that the installed connecting rod assembly has tactile side play. Carefully rotate the crankshaft to ensure that there is no binding.

   Note: If all connecting rod bearings require replacement on a four cylinder engine, the procedure can be carried out on two cylinders at the same time. The procedure can be carried out on the following pairs of cylinders. 1 with 4 and 2 with 3. **Ensure that both pairs of the connecting rod bearings are installed before changing from one pair of cylinders to another pair of cylinders.** Refer to Disassembly and Assembly, "Connecting Rod Bearings - Remove" for more information.

End By:

a. Install the suction pipe. Refer to Disassembly and Assembly, "Engine Oil Pump - Install".

Copyright 1993 - 2020 Caterpillar Inc.
All Rights Reserved.
Private Network For SIS Licensees.
Wed Nov 11 11:07:32 UTC+0530 2020

This is the sample of the manual

Click on the download link for complete manual

Download Link