AIE

WE PROVIDE THE POWER

G-SERIES

# G-SERIES INSTALL & MAINTENANCE MANUAL

# TABLE OF CONTENTS


SAFETY ..... 3

INTRODUCTION ..... 6

| | |
|---|---|
| MODEL IDENTIFICATION | 6 |
| LOCATION OF IMPORTANT COMPONENTS AND CONNECTIONS | 9 |
| FUEL RECOMMENDATIONS | 16 |
| ENGINE OIL RECOMMENDATIONS | 16 |
| OPERATOR INTERFACE | 18 |

INSTALLATION ..... 21

| | |
|---|---|
| SHELTER CONSTRUCTION | 22 |
| MOUNTING / FLOOR LOADING | 23 |
| VIBRATION | 24 |
| VENTILATION | 24 |
| AIR INLET | 25 |
| AIR OUTLET | 26 |
| EXHAUST PIPING | 27 |
| FUEL SYSTEM | 29 |
| DIESEL AND GASOLINE FUEL | 30 |
| GASEOUS FUELS | 31 |
| ELECTRICAL CONNECTIONS / EMERGENCY STOP WIRING / BATTERY | 31 |
| AUTO MODE REMOTE START SETUP | 32 |
| TESTING | 33 |

OPERATION ..... 33

| | |
|---|---|
| PRE-START CHECKS | 33 |
| BEFORE STARTING THE GENSET | 34 |
| OPERATING AT HIGH ALTITUDES | 35 |
| OPERATING IN HOT AMBIENT TEMPERATURES | 35 |

| | |
|---|---|
| OPERATING IN COLD AMBIENT TEMPERATURES | 35 |
| BREAKING IN A NEW ENGINE | 35 |
| EXERCISING THE GENSET | 36 |
| TRANSPORTATION, STORAGE, AND RETURNING TO SERVICE | 36 |

MAINTENANCE ..... 37
TROUBLESHOOTING/ FAULT ICONS ..... 38
SUPPORTING DOCUMENTS ..... 42
APPENDIX B: AC WIRING SCHEMATIC ..... 43
AIE EMISSIONS HOLD HARMLESS STATEMENT ..... 45


# SAFETY

Thoroughly read this manual before operating the genset. The following symbols are used throughout this manual and on the genset to warn of the potential hazards to the operator, service personnel, or equipment.

| | |
|---|---|
| **DANGER** | Alerts you to an immediate hazard that will result in severe personal injury or death. |
| **WARNING** | Alerts you to a hazard or unsafe practice that can result in severe personal injury or death. |
| **CAUTION** | Alerts you to a hazard or unsafe practice that can result in personal injury or equipment damage. |

When using the AUTO starting feature, electric shock and moving parts hazards are possible due to unexpected starting. Make sure that the genset is **NOT** in AUTO mode whenever performing maintenance or service or when the genset is stored.

*****All operators, no matter how knowledgeable, should read this and related manuals before operating the engine or any attached equipment. It is the owner's responsibility to instruct all operators in safe operation. Be sure to observe the following warnings for safe operation.*****

## EXHAUST GAS IS DEADLY

- Engine exhaust fumes can be very harmful if allowed to accumulate. Only operate the engine in a well-ventilated area.
- Inspect for exhaust leaks at every startup and after every eight hours of operation.
- Exposure to exhaust gases can cause carbon monoxide poisoning.
- Engine cooling air must not be used for heating working or living spaces or compartments.
- Disable any automatic starting systems before storing the genset in a confined area.

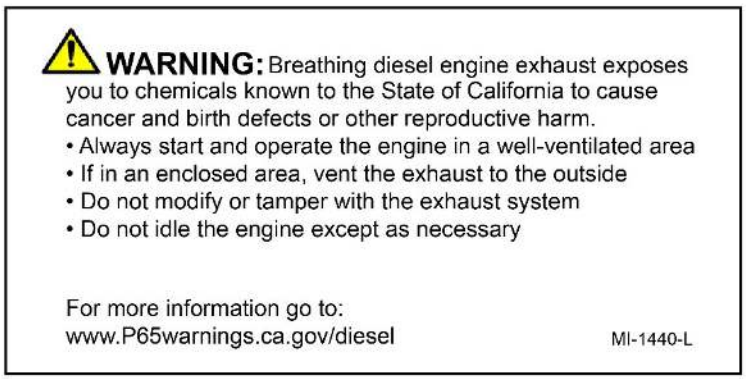


## EXHAUST GAS IS DEADLY

- Diesel, Gasoline and Vapor type fuels are combustible. Do not smoke or make/break electrical connections when these fumes are present.
- Keep flames, sparks, pilot lights, and arc-producing equipment and all other sources of ignition well away from fuel sources.
- Fuel lines must be secured, free of leaks and separated or shielded from electrical wiring.

## GENERATOR VOLTAGE IS DEADLY

- Disable any automatic starting systems before performing inspections or service on the genset to avoid electric shock from unexpected start.
- Generator electrical output connections must be made by a trained and experienced electrician in accordance with applicable codes.
- The genset must not be connected to the public power utility or any other source of electrical power. Back-feed could lead to electrocution of utility personnel and/or damage equipment. An approved switching device must be used to prevent interconnections.
- Use caution when working with live electrical equipment. Remove jewelry, wear tight fitting clothing, and only use insulated tools.
- Electric shock can be deadly. Always insulate yourself from ground and never operate the genset when wet.

## MOVING PARTS CAN CAUSE SEVERE PERSONAL INJURY OR DEATH

- Disable any automatic starting systems before performing inspections or service on the genset to avoid unexpected start.
- Do not wear loose clothing or jewelry near moving parts such as fans, belts and pulleys.
- Keep hands away from moving parts.

## BATTERY GAS IS EXPLOSIVE

- Wear safety glasses.
- Do not smoke near battery.
- To reduce arcing when disconnecting or reconnecting battery cables, always disconnect the negative (-) battery cable first and reconnect it last.

## FLAMMABLE VAPOR CAN CAUSE AN ENGINE TO OVERSPEED

- Flammable vapor can cause an engine to over speed and become difficult to stop, resulting in possible fire, explosion, severe personal injury and death.
- Do not operate gensets where a flammable vapor environment can be created by fuel spill or leak.

## GENERAL CAUTIONS

- Exhaust gas can be extremely hot. Do not point toward people. Keep machine more than 1 meter (3 feet) from flammable materials.
- Check for fuel leaks before each operation.
- Stop the engine before adding fuel to tank (where applicable)
- Anti-freeze coolant contains ethylene glycol, which is toxic to humans and animals. Clean up spills and dispose of used engine coolant in accordance with local regulations.

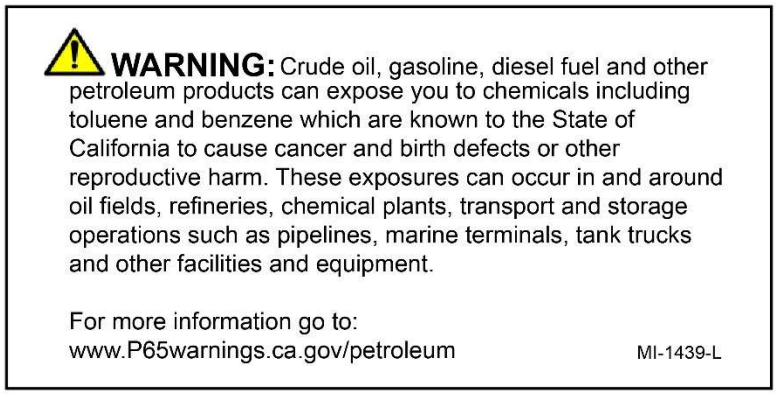

**This manual covers the installation, operation, and maintenance of the G-Series family of gensets. Be sure to read the entire manual thoroughly before first use and obey all safety warning information contained within. Proper installation and use as described in this manual will ensure your genset operates at peak performance. The owner is responsible for proper installation observing all local electrical and building codes. The owner is also responsible for performing regular maintenance as described in the supplied engine Operator's Manual.**

## MODEL IDENTIFICATION

The engine model and serial number can be found on the engine valve cover toward the front of the engine (Kubota) or on the side of the engine block (JCB). The alternator model and serial number are located on the side of the barrel of the alternator (shown above)

You should record the model and serial numbers below for quick reference in the future.

| | MODEL # | SERIAL # |
|---|---|---|
| ENGINE: | | |
| GENERATOR: | | |

### MODEL AND SERIAL NUMBER LOCATION (KUBOTA):

Kubota Engine Model and Serial Number location on top of valve cover.

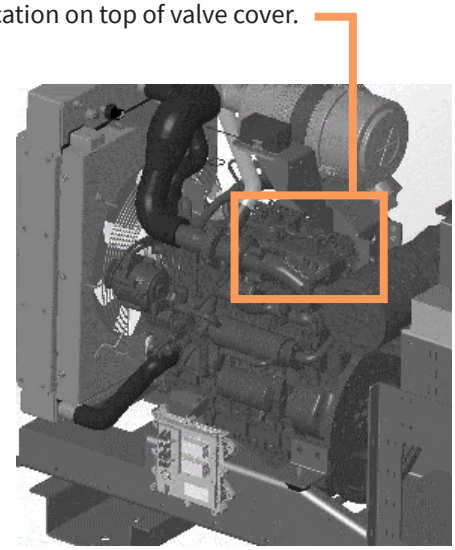

# MODEL AND SERIAL NUMBER LOCATION (JCB):

JCB Engine Model and Serial Number location on side of block under exhaust and on back engine above the flywheel housing.




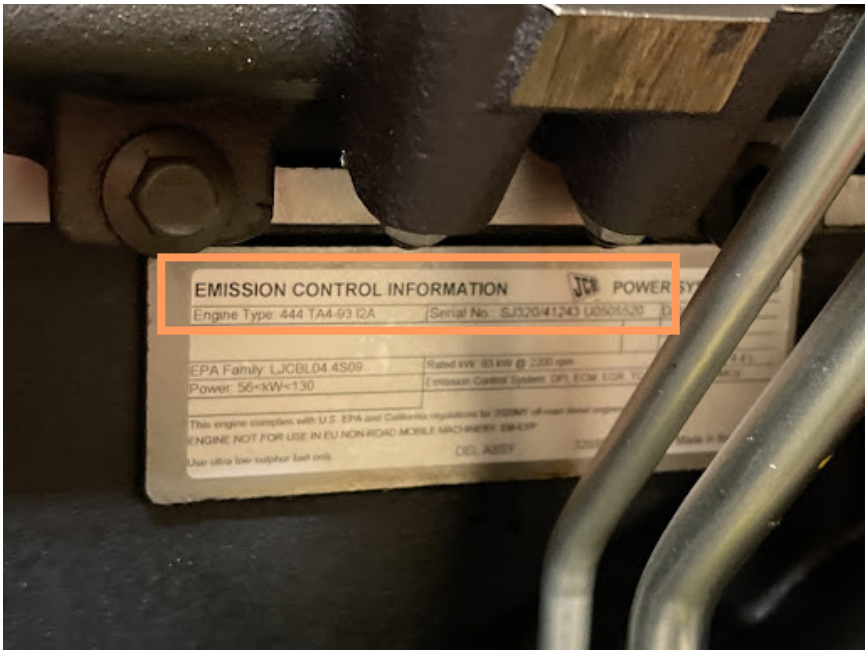






ai-engines.com
info@ai-engines.com

## Alternator Nameplate

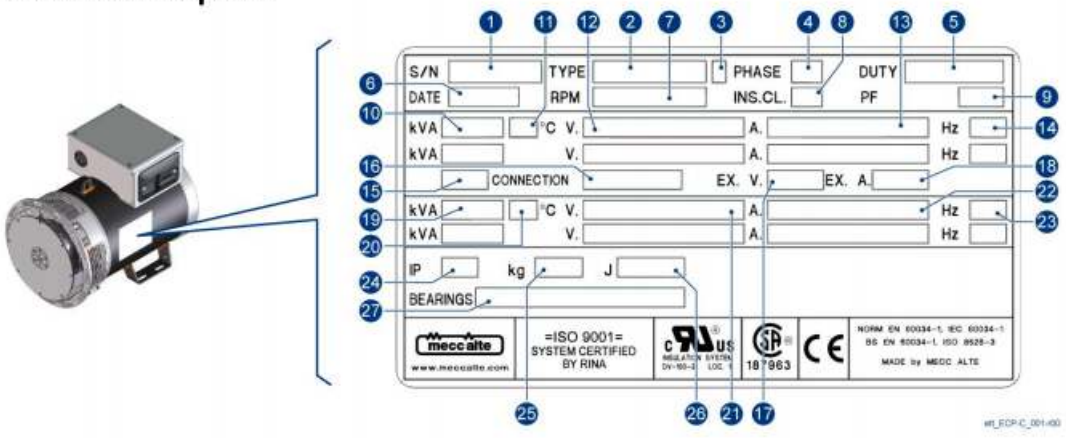


1. Serial number
2. Model
3. Revision index
4. Phase number
5. Service type
6. Manufacture month / year
7. Nominal speed
8. Insulation class
9. Power factor
10. Nominal power related to temperature (11)
11. Maximum ambient temperature
12. Nominal Voltage
13. Nominal Current
14. Nominal Frequency
15. Nominal characteristics class
16. Connection type
17. Excitation Voltage
18. Excitation Current
19. Power related to temperature (20)
20. Ambient temperature
21. Nominal Voltage
22. Current related to power (19)
23. Nominal Frequency
24. Protection Rating
25. Total weight
26. Moment of inertia
27. Bearing type





ai-engines.com
info@ai-engines.com

# LOCATION OF IMPORTANT COMPONENTS AND CONNECTIONS

The location of major components needed for operation and maintenance are shown below. For more details see the **MAINTENANCE** section in the manufacture's engine manual provided with the genset.

## G-9 TO G-13 MECHANICAL DIESEL OPEN UNIT

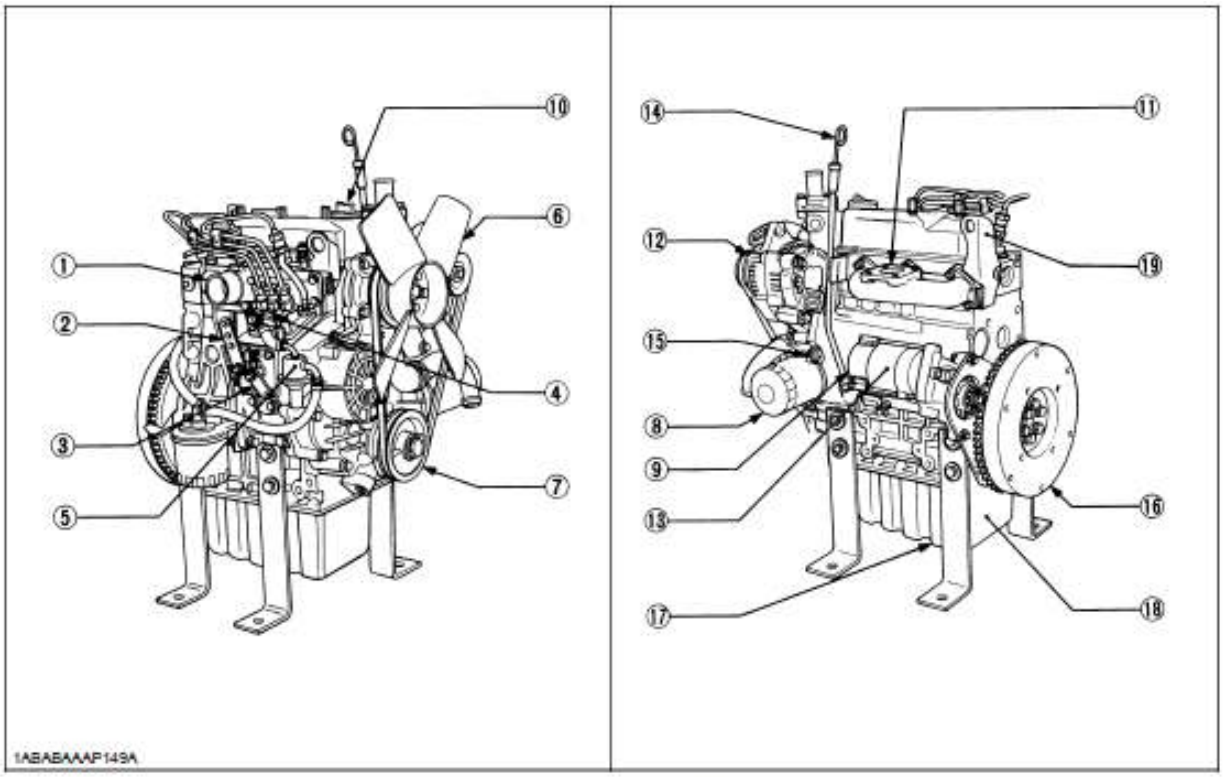


(1) Intake manifold
(2) Speed control lever
(3) Engine stop lever
(4) Injection pump
(5) Fuel feed pump
(6) Cooling fan
(7) Fan drive pulley
(8) Oil filter cartridge
(9) Water drain cock
(10) Oil filler plug
(11) Exhaust manifold
(12) Alternator
(13) Starter
(14) Oil level gauge
(15) Oil pressure switch
(16) Flywheel
(17) Oil drain plug
(18) Oil pan
(19) Engine hook



ai-engines.com
info@ai-engines.com

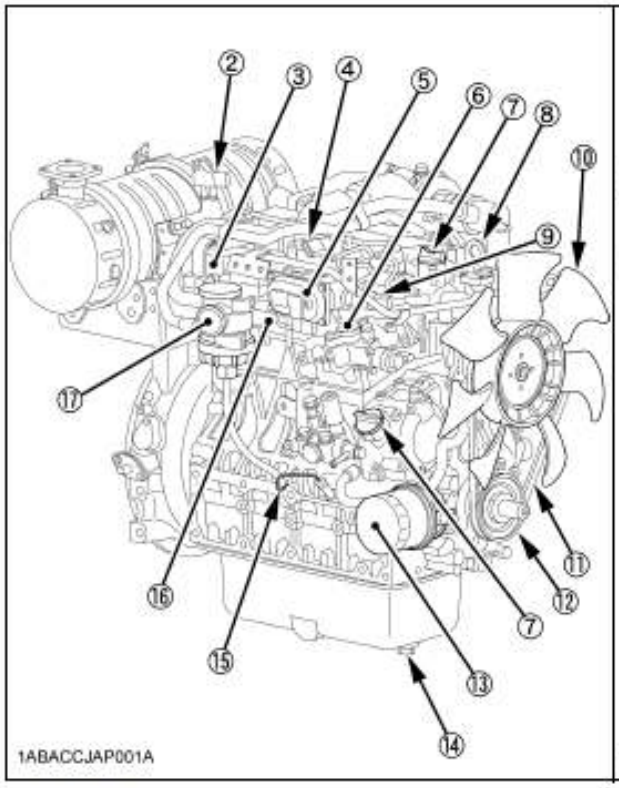


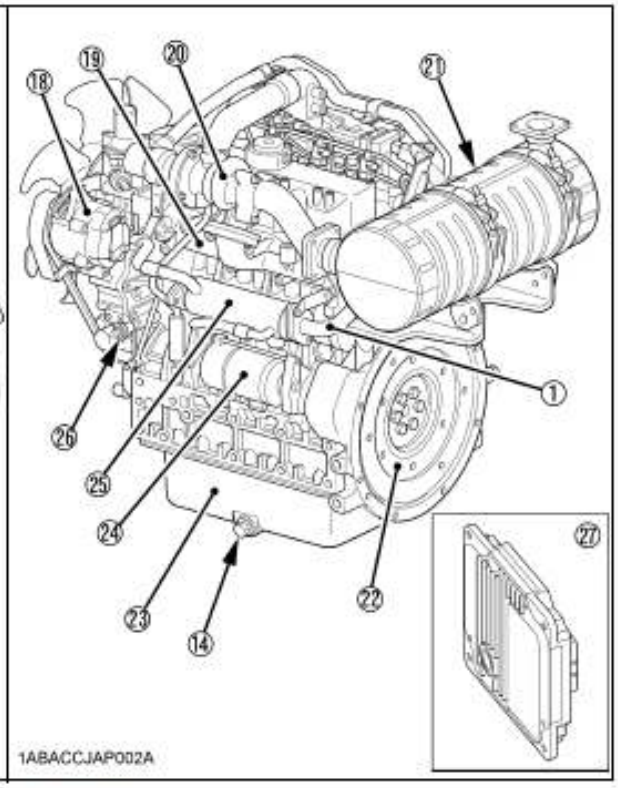


(1) EGR pipe
(2) Differential pressure sensor
(3) EGR valve
(4) Temperature sensor
(5) Intake air throttle
(6) Supply pump
(7) Oil filler plug
(8) Engine hook
(9) Rail
(10) Cooling fan
(11) Fan belt
(12) Fan drive pulley
(13) Oil filter cartridge
(14) Oil drain plug
(15) Oil level gauge
(16) Intake manifold
(17) Oil separator
(18) Alternator
(19) Exhaust manifold
(20) Turbo-charger
(21) Diesel particulate filter (DPF)
(22) Flywheel
(23) Oil pan
(24) Starter
(25) EGR cooler
(26) Oil pressure switch
(27) ECU (Engine Control Unit)

## G-20

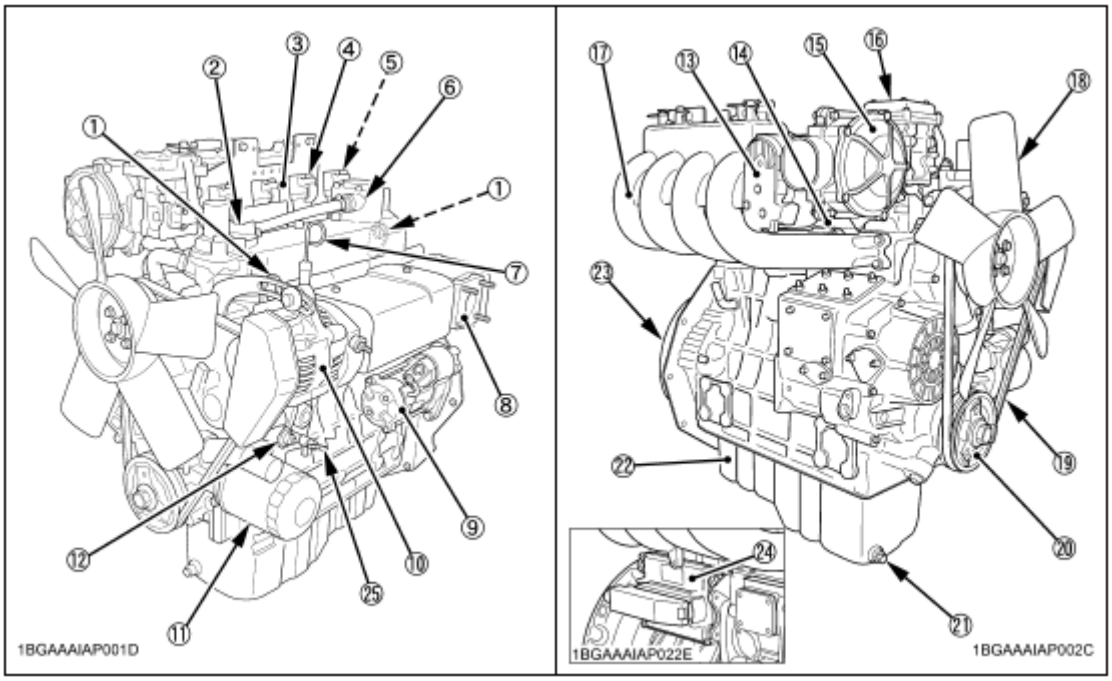


| Ref. No. | Part Name | Remarks | Ref. No. | Part Name | Remarks |
|---|---|---|---|---|---|
| 1 | Engine hook | | 18 | Cooling fan | |
| 2 | Oil filler plug | | 19 | Fan belt | |
| 3 | Delivery pipe (gasoline) | Only G and GL type engines | 20 | Fan drive pulley | |
| | | | 21 | Oil drain plug | |
| 4 | Ignition coil | | 22 | Oil pan | |
| 5 | Spark plug | | 23 | Flywheel | |
| 6 | PCV valve | | 24 | ECU (Engine control unit) | |
| 7 | Oil level gauge | | 25 | Coolant drain shutoff-valve | Only WG1605 |
| 8 | Exhaust manifold | | | | |
| 9 | Starter | | 26 | Oil separator | Only WG3800-L/N/LN *1 |
| 10 | Alternator | | | | |
| 11 | Oil filter cartridge | | 27 | Sensor (O2) | |
| 12 | Oil pressure switch | | 28 | Fuel pump | Only G and GL type engines |
| 13 | Electronic control throttle | | | | |
| 14 | Injector | Only G and GL type engines | 29 | Manifold (FPM) | Only G and GL type engines |
| 15 | Gas mixer | Other than G type engine | 30 | Regulator assy (D-STAGE) | Only L, GL and LN type engines *2 |
| 16 | Pressure regulator | Other than G type engine | 31 | Lock off valve | |
| | | | 32 | Catalytic converter | or catalytic muffler |
| 17 | Intake manifold | | 33 | Catalytic muffler | or catalytic converter |

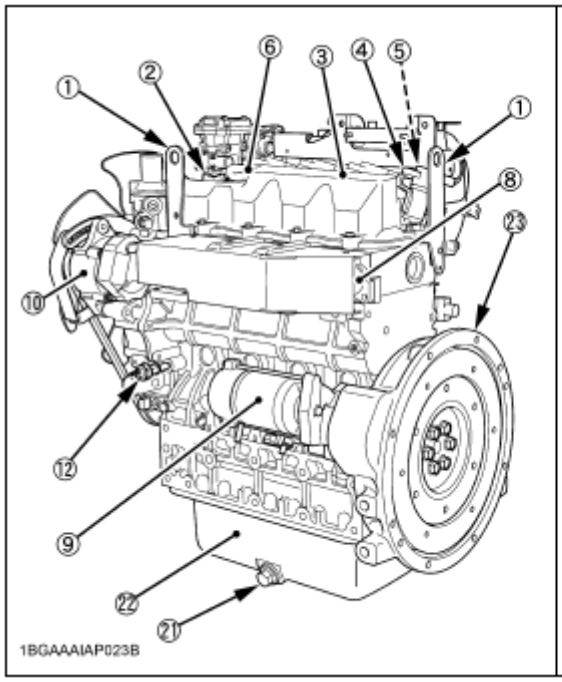


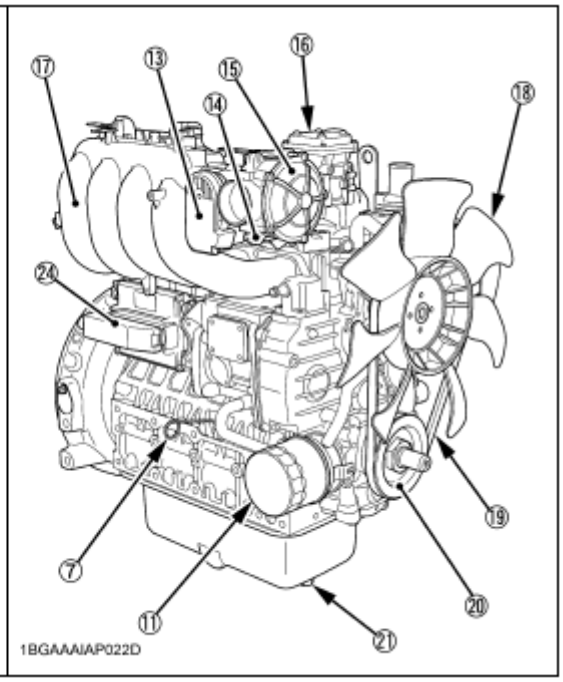


| Ref. No. | Part Name | Remarks | Ref. No. | Part Name | Remarks |
|---|---|---|---|---|---|
| 1 | Engine hook | | 18 | Cooling fan | |
| 2 | Oil filler plug | | 19 | Fan belt | |
| 3 | Delivery pipe (gasoline) | Only G and GL type engines | 20 | Fan drive pulley | |
| | | | 21 | Oil drain plug | |
| 4 | Ignition coil | | 22 | Oil pan | |
| 5 | Spark plug | | 23 | Flywheel | |
| 6 | PCV valve | | 24 | ECU (Engine control unit) | |
| 7 | Oil level gauge | | 25 | Coolant drain shutoff-valve | Only WG1605 |
| 8 | Exhaust manifold | | | | |
| 9 | Starter | | 26 | Oil separator | Only WG3800-L/N/LN *1 |
| 10 | Alternator | | | | |
| 11 | Oil filter cartridge | | 27 | Sensor (O2) | |
| 12 | Oil pressure switch | | 28 | Fuel pump | Only G and GL type engines |
| 13 | Electronic control throttle | | | | |
| 14 | Injector | Only G and GL type engines | 29 | Manifold (FPM) | Only G and GL type engines |
| 15 | Gas mixer | Other than G type engine | 30 | Regulator assy (D-STAGE) | Only L, GL and LN type engines *2 |
| 16 | Pressure regulator | Other than G type engine | 31 | Lock off valve | |
| | | | 32 | Catalytic converter | or catalytic muffler |
| 17 | Intake manifold | | 33 | Catalytic muffler | or catalytic converter |

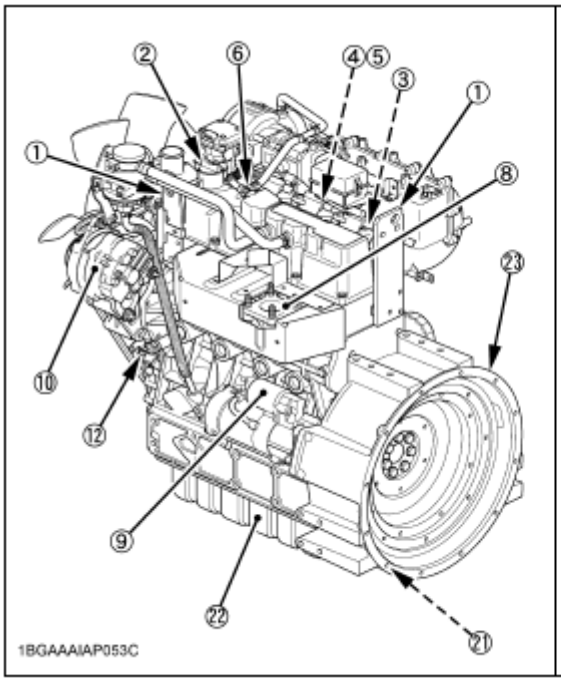


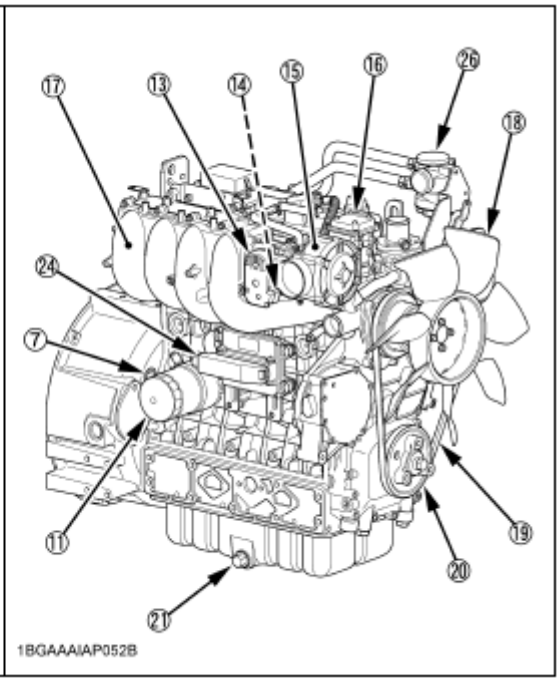


| Ref. No. | Part Name | Remarks | Ref. No. | Part Name | Remarks |
|---|---|---|---|---|---|
| 1 | Engine hook | | 18 | Cooling fan | |
| 2 | Oil filler plug | | 19 | Fan belt | |
| 3 | Delivery pipe (gasoline) | Only G and GL type engines | 20 | Fan drive pulley | |
| | | | 21 | Oil drain plug | |
| 4 | Ignition coil | | 22 | Oil pan | |
| 5 | Spark plug | | 23 | Flywheel | |
| 6 | PCV valve | | 24 | ECU (Engine control unit) | |
| 7 | Oil level gauge | | 25 | Coolant drain shutoff-valve | Only WG1605 |
| 8 | Exhaust manifold | | | | |
| 9 | Starter | | 26 | Oil separator | Only WG3800-L/N/LN *1 |
| 10 | Alternator | | | | |
| 11 | Oil filter cartridge | | 27 | Sensor (O2) | |
| 12 | Oil pressure switch | | 28 | Fuel pump | Only G and GL type engines |
| 13 | Electronic control throttle | | | | |
| 14 | Injector | Only G and GL type engines | 29 | Manifold (FPM) | Only G and GL type engines |
| 15 | Gas mixer | Other than G type engine | 30 | Regulator assy (D-STAGE) | Only L, GL and LN type engines *2 |
| 16 | Pressure regulator | Other than G type engine | 31 | Lock off valve | |
| | | | 32 | Catalytic converter | or catalytic muffler |
| 17 | Intake manifold | | 33 | Catalytic muffler | or catalytic converter |





ai-engines.com
info@ai-engines.com

# G-50 DIESEL

(JCB ENGINE)

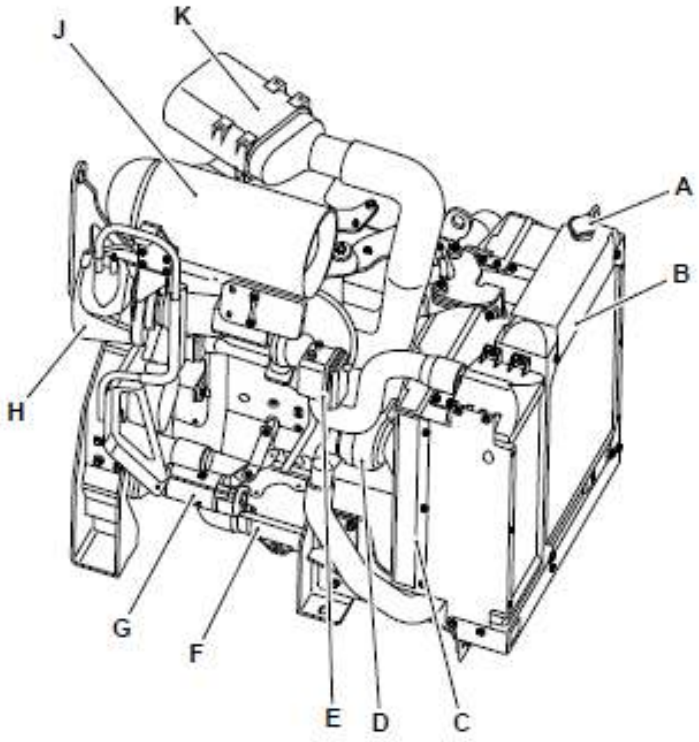


- **A** Coolant filler
- **B** Expansion tank
- **C** Radiator
- **D** Charge alternator
- **E** Turbocharger
- **F** Oil sump
- **G** Starter motor
- **H** DEF injector
- **J** SCR
- **K** Air filter

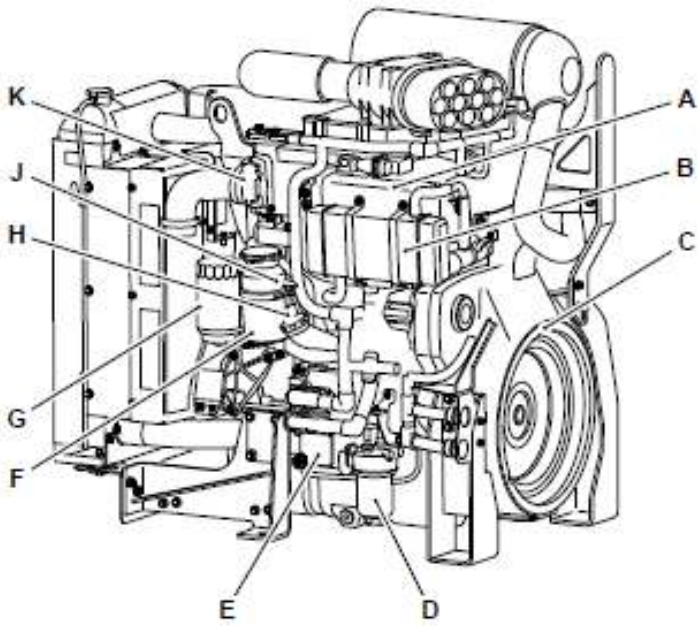


- **A** Inlet manifold
- **B** EGR (Exhaust Gas Recirculation) cooler
- **C** Flywheel housing
- **D** Fuel filters – primary & secondary
- **E** ECU (Electronic Control Unit)
- **F** CCV (Crankcase Ventilation) filter
- **G** Engine oil filter
- **H** Engine oil filler
- **J** Engine dipstick
- **K** Throttle

# G-9 TO G-50 OPEN AND ENCLOSED UNIT DETAIL

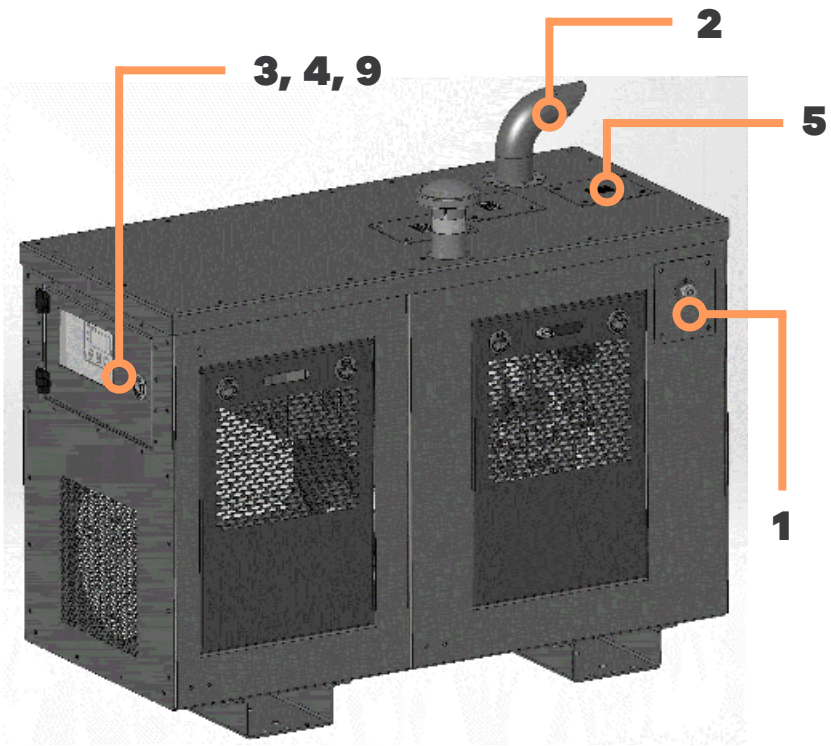


| NUMBER | ITEM / FUNCTION |
|---|---|
| 1 | EMERGENCY STOP |
| 2 | EXHAUST OUTLET |
| 3 | GENERATOR CONTROLLER |
| 4 | MAIN CIRCUIT BREAKER |
| 5 | RADIATOR FILL |
| 6 | FUEL FILTER |
| 7 | AIR FILTER |
| 8 | OIL DRAIN |
| 9 | FUSE/RELAY PANEL |
| 11 | OIL FILL |
| 12 | GENERATOR AVR |

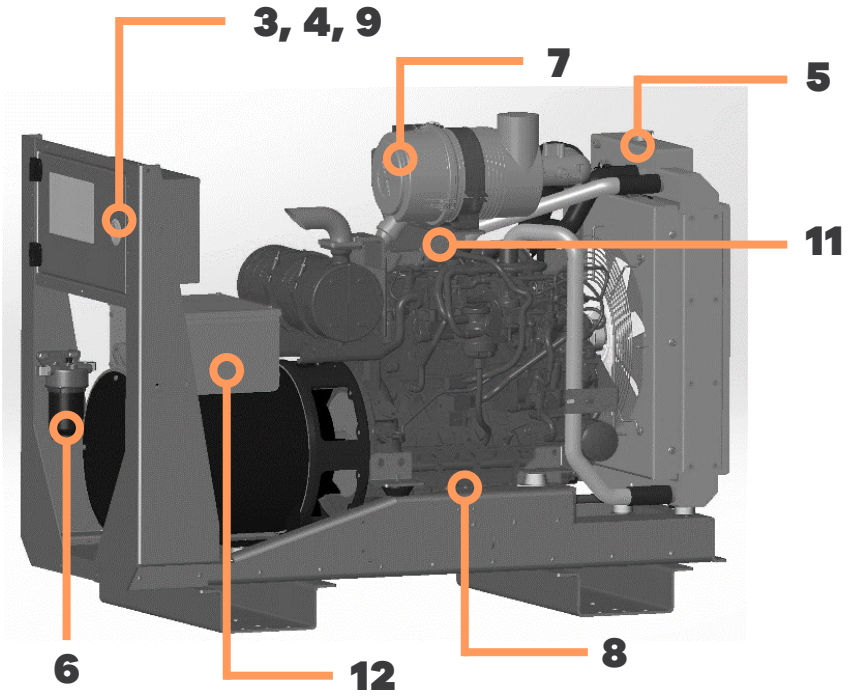




ai-engines.com
info@ai-engines.com

## FUEL RECOMMENDATIONS

**WARNING**

*****Fuel is combustible and can cause severe personal injury or death. Do not smoke near fuel tanks or equipment. Keep all flames, sparks, or all other sources of ignition well away.*****

For diesel engines, the use of ultra-low sulfur fuel (15ppm or 0.0015 wt.%) is mandatory when operated in US EPA regulated areas. The use of Kerosene, whether blended with diesel or otherwise is prohibited within US EPA regulated areas. Please use No. 2-D S15 diesel fuel as an alternative to No. 2-D and use No. 1-D S15 for ambient temperatures below -10°C (14°F).

The minimum recommended Cetane rating is 45. A Cetane rating of greater than 50 is preferred, especially for ambient temperatures below -20°C (-4°F) for elevations above 1500m (5000 ft.). Kerosene, which has a very low in Cetane rating, adversely affects the engine and is prohibited within US EPA regulated areas and should be avoided in areas outside of US EPA regulated areas.

Biodiesel blends of up to 5% (B5) may be used in the genset. Blends of biodiesel above 5% may void the engine warranty. Biodiesel fuels must be blended according to EN 590 or ASTM D975. Raw processed vegetable oils are not acceptable for use in any concentration.

- For LP engines, use Commercial LPG only and ensure the fuel supply is a liquid withdrawal type.
- For Natural Gas engines, use Commercial Natural Gas (including CNG). For wellhead gas usage, please refer to the Kubota Application Manual.
- For Gasoline engines, use unleaded gasoline and E10 only. Do not use gasoline blended with methyl alcohol.

## ENGINE OIL RECOMMENDATIONS

Use engine oil that is recommended by model below (on the following page). Change the viscosity of engine oil according to the ambient temperature (Figure 4). Synthetic oil may be used after the initial break-in period. Maintain proper engine oil change intervals when using full synthetic engine oil, do not extend the oil change interval.

## FIGURE 4: OIL VISCOSITY VS. AMBIENT TEMPERATURE

| KUBOTA SPARK IGNITED ENGINES | |
|---|---|
| Engine oil should have properties of API classification SL or higher | |
| Change the type of oil according to the ambient temperature | |
| | |
| Above 25 degrees C (77 degrees F) | SAE 30 or SAE 10W-30 / SAE 15W-40 |
| 0 degrees C to 25 degrees C (32 to 77 degrees F) | SAE 20 or SAE10W-30 |
| 0 degrees C to -20 degrees C (32 to -4 degrees F) | SAE 20 or SAE10W-30 |
| Below -20 degrees C (-4 degrees F) | SAE 5W-30 |
| | |
| KUBOTA DIESEL ENGINES | |
| Engine oil should be API classification CJ-4 or CK-4 | |
| Change the type of oil according to the ambient temperature | |
| | |
| Above 25 degrees C (77 degrees F) | 10W-30 or 10W-40 or 15W-40 |
| -10 degrees C to 25 degrees C (14 to 77 degrees F) | 10W-30 or 10W-40 or 15W-40 |
| Below -10 degrees C (14 degrees F) | 10W-30 or 10W-40 |
| | |
| JCB DIESEL ENGINES | |
| Engine oil should be API classification of CH-4 or better | |
| Change the type of oil according to the ambient temperature | |
| | |

| | MIN TEMP | MAX TEMP |
|---|---|---|
| SAE 0W30 | -40 C (-40 F) | 30 C (86 F) |
| SAE 0W20 | -40 C (-40 F) | 10 C (50 F) |
| SAE 5W20 | -30 C (-22 F) | 10 C (50 F) |
| SAE 5W40 | -30 C (-22 F) | 40 C (104 F) |
| SAE 10W30 | -20 C (-4 F) | 40 C (104 F) |
| SAE 15W40 | -15 C (-5 F) | 50 C (122 F) |

The main operator interface is installed in the control box on the outside of the genset enclosure or mounted in the same control box on an open unit. The control box contains a Deep Sea control panel (see below various Deep Sea control panels), main generator breaker, voltage sensing fuses and current transformers. The Deep Sea panel is responsible for all genset starting, stopping, and safety monitoring. For more information on using the Deep Sea panel, refer to the Deep Sea Controller Operator Manual supplied with the genset.

**Examples of Deep Sea Controllers offered on the G-Series are as follows:**



## DEEP SEA 4510

STARTING THE GENSET

***NOTE:*** *For further details, see Section 5 in the Deep Sea Operators Manual entitled Operation*




STOPPING THE GENSET



STARTING THE GENSET

***NOTE:*** *For further details, see Section 5 in the Deep Sea Operators Manual entitled Operation*




STOPPING THE GENSET



STARTING THE GENSET

***NOTE:*** *For further details, see Section 5 in the Deep Sea Operators Manual entitled Operation*




STOPPING THE GENSET



This section will guide you through proper installation of a G-Series genset. Proper installation is key to correct genset operation and ensuring the long life of the unit. ***Read this entire section thoroughly BEFORE installing the genset.***

The G-Series genset requires an external fuel source and 12V DC battery. Except for the gasoline fuel genset which come pre-plumbed, it is up to the installer to provide an acceptable fuel tank/regulator, install fuel lines, provide, and install a recommended battery (See table 1 below for battery recommendations). Only a technician experienced with diesel or spark ignited engines and generators should install this genset. High voltage electrical connections must be made before operating the genset. All high voltage electrical connections should be made by an electrician in accordance with all local codes.

## TABLE 1: BATTERY RECOMMENDATIONS

| ENGINE | BATTERY MINIMUM CCA | BATTERY CABLE SIZE (AWG) |
|---|---|---|
| D1005 | 750 | 1 GAUGE UP TO 36” |
| D1105 | 750 | 1 GAUGE UP TO 36” |
| V1505 | 750 | 1 GAUGE UP TO 36” |
| D1803 | 950 | 1 GAUGE UP TO 36” |
| V2403 | 950 | 1 GAUGE UP TO 36” |
| WG1605 | 750 | 1 GAUGE UP TO 36” |
| WG2503 | 750 | 1 GAUGE UP TO 36” |
| WG3800 | 750 | 2/0 UP TO 36” |
| JCB 430 | 950 | 4/0 UP TO 36” |

**DANGER** Electric shock can be deadly. Failure to install a generator set with an electrical system consistent with governing regulations is **UNLAWFUL** and may cause **ELECTROCUTION** to installer or operator. Never connect this generator to utility power or back feed existing electrical systems without proper transfer switch gear in place.

**DANGER** Diesel fuel is combustible and can cause severe personal injury or death. Do not smoke near diesel fuel tanks or equipment. Keep all flames, sparks, or all other sources of ignition well away.




Exhaust gas is deadly. Never operate the genset without proper ventilation. Check for leaks in the exhaust system regularly. Exposure to exhaust gases can cause carbon monoxide poisoning. Symptoms of carbon monoxide poisoning include dizziness, throbbing in temples, nausea, muscular twitching, headache, vomiting, weakness and sleepiness, and inability to think clearly. If you or anyone experiences these symptoms, get to fresh air immediately. If symptoms persist, seek medical attention.




Battery gas is explosive. Do not smoke or introduce any sparks, flames or arcs near the battery at any time. Do not make direct contact between battery terminals to prevent sparks.




Many engine components and fluids can be hot and cause severe burning on contact. Exhaust piping, engine oil, engine coolant, exhaust insulation, radiator core, and other parts can become extremely hot after extended operation. Do not work on a genset until it has sufficiently cooled.




Moving parts can cause personal injury. Keep hands, feet and clothing away from belts, pulleys, fans and rotors while engine is operating. Always replace safety guards, screens and covers before operating the genset.



## SHELTER CONSTRUCTION

Where applicable, a generator shelter should comply with the national building code and any local ordinances. Open skid generators are pieces of electrical equipment and as such should be protected from the elements. Exposure to water, snow or excessive dust can cause dangerous conditions. Any enclosure should be designed to provide a dry and clean environment for the generator set and all electrical and fuel connections. Take precaution to ensure that the generator set is protected from direct contact with rain as well as the work area designed in a way to prevent water from pooling or otherwise running in the service areas.

Generator sets produce significant amounts of heat. The structure should be constructed of non-combustible materials like concrete block, steel, or other fire-resistant materials complying with local code. Adequate space between the structure and any component of the generator is necessary. The radiator side of the generator should be mounted near an outside wall to make successful ventilation easier. Be sure to account for ceiling height and exhaust installation when planning a structure. Protect the structure from the heat generated by the system and allow room for service personnel to gain access to the generator for routine maintenance and other necessary repairs. A general rule is to allow at least three feet between the generator and any part of the structure or utilities. Keep the area next to the generator clear and do not allow anything to be left or stored in this area.

The structure should be designed to restrict access to the generator set and other utilities from unauthorized people. Access to the shelter or any maintenance work should only be performed by people that are qualified and professionally trained on the safe operation and service of the generator, fuel system and all other electrical components. Generator sets can start automatically and must be properly disabled before any service work begins. See the operator's manual for additional instructions.

## MOUNTING / FLOOR LOADING

G-Series gensets are designed to be mounted to a level, solid surface (like a concrete pad or sufficiently strong truck chassis/trailer). The surface should be checked for flatness before tightening down the genset as shims may be needed for a level installation. The floor of any shelter (or any mounting location) should be designed for the proper mounting of the generator set. Each generator is required to be mounted with anchor bolts to a concrete slab or other like solid surface. The generator should not be set on dirt, rock or any other unstable surface. Where applicable, the dirt under the slab must be able to support the combined weight of the slab and the generator set. Some areas and soil types may require special foundations or larger/thicker pads to provide a stable foundation. Failure to provide a stable foundation may result in the generator moving during operation or settling over time and cause damage to the fuel and electrical system that could result in injury or death. See mounting hole locations below on G-Series products.

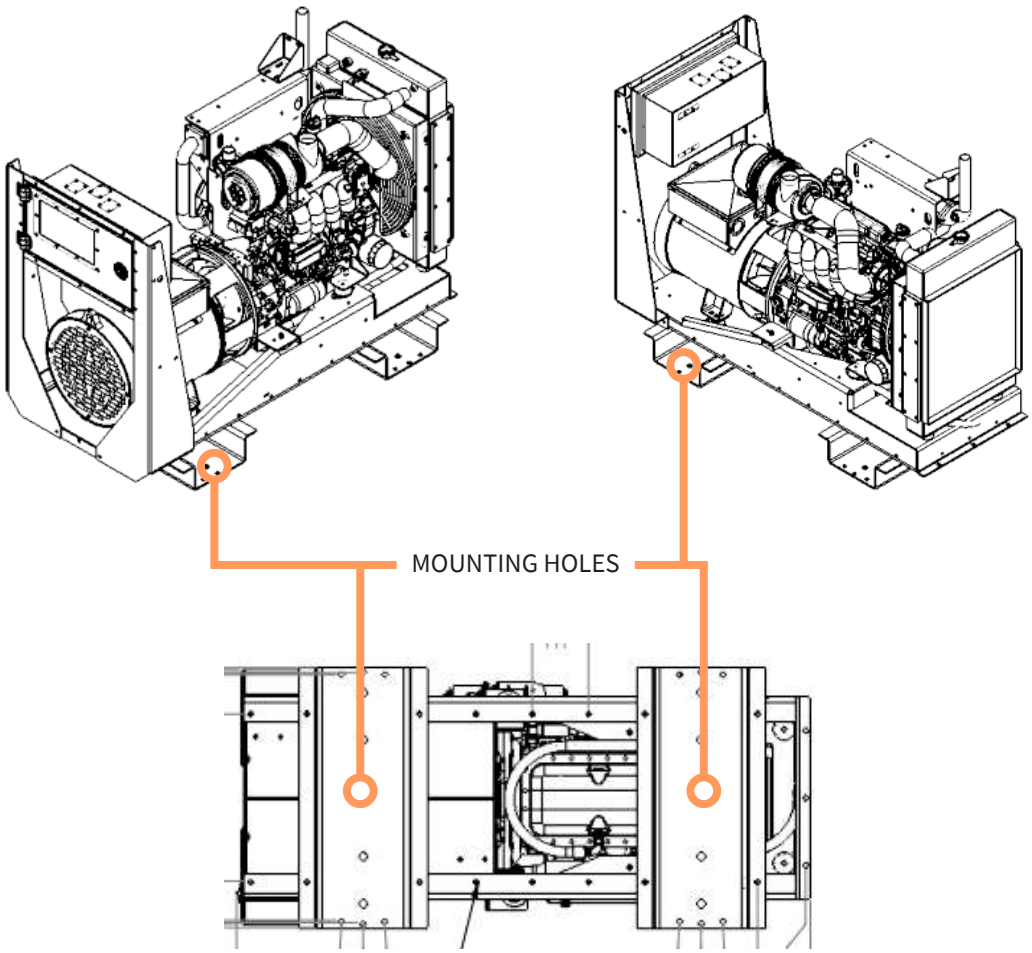

## VIBRATION

The generator sets produce electricity with rotating equipment that causes vibration to be transmitted to any surface it comes into contact with. G-Series generators are equipped with vibration isolation mounts between the engine and generator ends and the base frame. This allows the base frame to safely be mounted to the concrete pad directly without any additional vibration dampening.

During installation you will be required to make connections to the generator set. Any connection to a part of the system that is allowed to vibrate with the engine and generator will require isolation as part of your installation. The easiest way to identify components that require isolation is to observe whether they are connected to the generator base or if they are mounted to the engine or generator. Any item mounted to the base is safe to make a rigid connection. All other items require isolation.

To make installation easier, G-Series models come with the exhaust system installed. This saves you the time and effort of having to hang the muffler and isolate it. It also makes the ducting very easy to install. Should the exhaust need to be extended, please refer to the **EXHAUST PIPING section on page 26**.

We do not recommend that additional vibration isolators be installed between the generator base and the concrete pad. These can increase the total amount of vibration in the generator set causing component failures. Some applications and codes (example: Seismic) may require special vibration isolators. These items should be carefully engineered to ensure that the vibration when the generator set is operating normally is at a safe level and does not exceed component acceptable levels.

Some manufacturing process can create repeated vibrations in the ground. If your facility has these kinds of processes the concrete pad may need to be isolated from the facility to protect the generator system from damage.

## VENTILATION

The generator set utilizes an internal combustion engine which generates significant amounts of heat. Running at higher temperatures will increase engine and generator wear and reduce the useful life of the equipment. G-Series liquid-cooled generator sets come equipped with pusher fans. This means that all cooling air is pushed through the radiator from the engine side. In order to ensure proper operation an air inlet and outlet must be supplied in the shelter. All inlets and outlets should be designed to protect the equipment from rodents, moisture and other hazards. Make sure that any 90 degree turns, or other routes are expanded to avoid restricting air-flow.

The cooling air inlet should be at least 150% of the radiator outlet opening. The extra inlet area is essential to minimize restriction and to provide combustion air for the engine. When calculating the inlet area remember that some of the space will be obstructed by screens, louvers or baffles. Make sure your open area accounts for these obstructions.

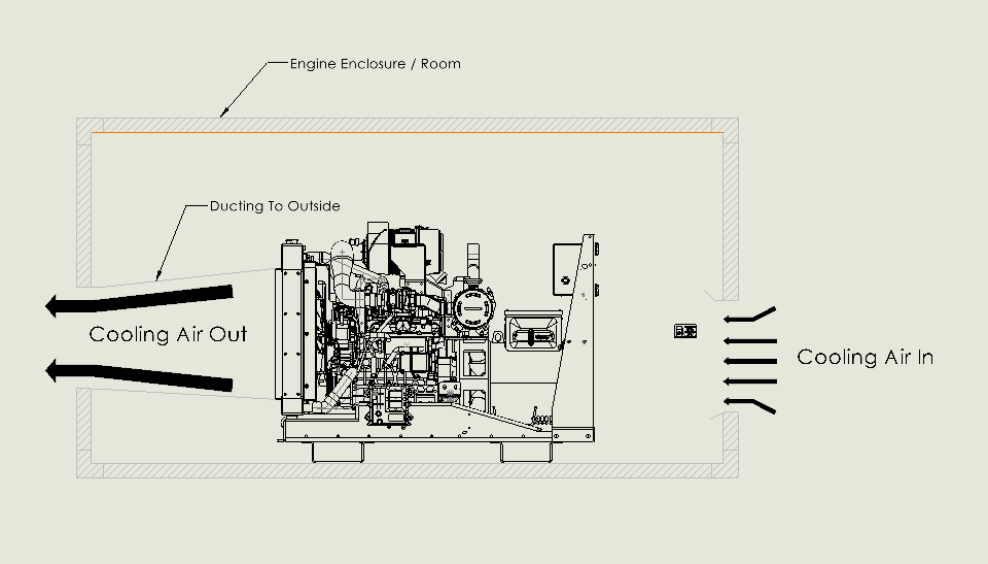


***Example:*** *Outlet Opening Sizing – Radiator Width and Height*

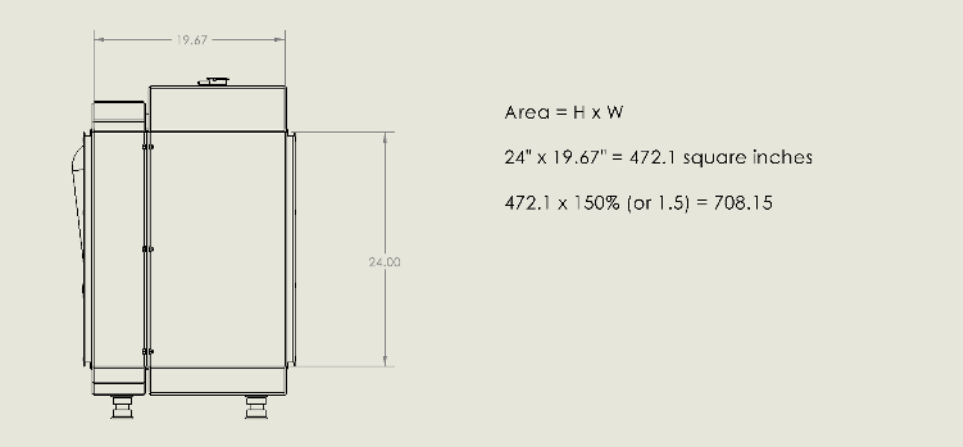


For this example, you will need approximately 480 square inches for an outlet opening and 710 square inches of cooling air inlet opening.

This inlet should be opposite the hot air exhaust, causing the pusher fan to draw the cooling air across the entire machine. The cool air inlet should be protected with louvers or other ducting to prevent water or other contaminants from entering the enclosure.





ai-engines.com
info@ai-engines.com

# AIR OUTLET

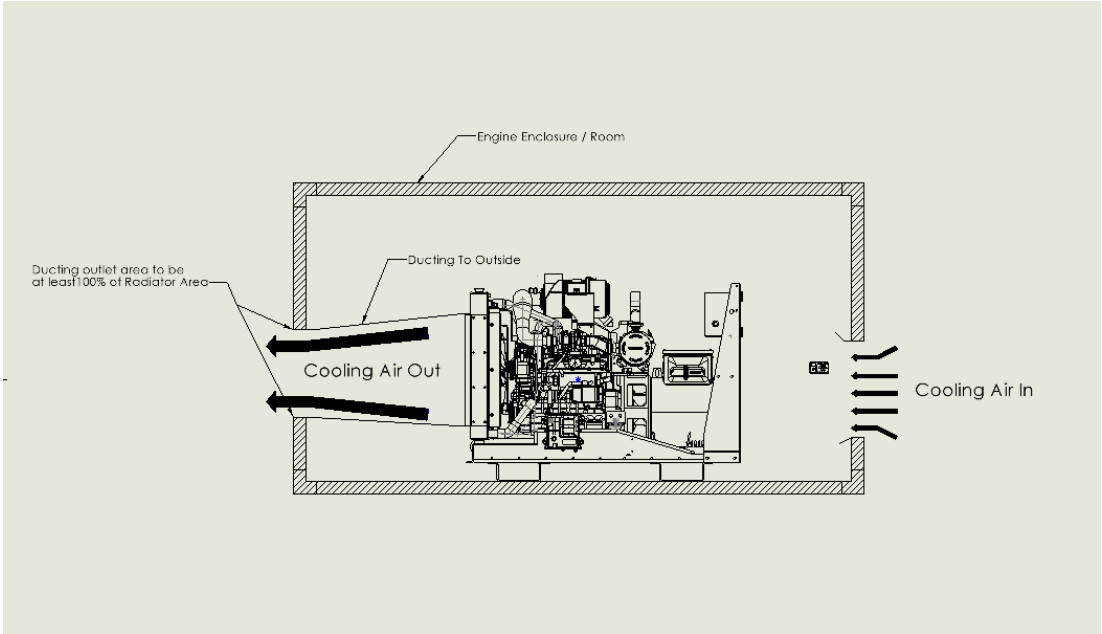


The radiator output must be over 100% of the total radiator area. Remember to take into account obstructions from louvers and turns when calculating the required outlet area.

The ducting to the outside must be tight to the radiator to prevent air escaping and recirculating in the room. On models where the duct flange is connected directly to the radiator to include a section of flexible ducting to prevent damage to the equipment. On models where the oversized duct flange is bolted to the fame no flexible ducting is required.





ai-engines.com
info@ai-engines.com

# EXHAUST PIPING

It is essential to carefully layout and plan your exhaust system. Improper installation can result in damage to the equipment and create conditions that are hazardous to personnel. Internal combustion engines create carbon monoxide that can result in injury or death. Make sure the exhaust is discharged outside the shelter and ensure proper installation prevents leaks inside the shelter. Exhaust temperatures can exceed 1000 degrees F. Use an exhaust thimble when passing exhaust pipes through the shelter's walls or roof. The thimble will prevent heat build-up that can damage the walls and building. Identify windows, building air intakes and other site considerations that could expose personnel to exhaust fumes. Do not place any exhaust components near any combustible material. Pay attention to all service points while installing the exhaust run and remember to consult the applicable codes and standards. Support all exhaust components appropriately to prevent premature wear resulting in cracking and exhaust leaks.

The exhaust system should be designed to be as short as possible. On runs over 25 feet consult AIE application engineering. Do not use more than three 90-degree elbows or six 45-degree elbows. The pipe must be at least the same internal diameter of the exhaust manifold on the engine or larger. Reducers in the exhaust increase back pressure which may cause overheating and void the emissions certification on the engine. To improve heat transfer expanding the exhaust to larger diameters after the muffler can help reduce back pressure and reduce heat in the system. A condensation trap should be installed in the exhaust run to allow any water to collect safely and be drained as necessary. Steps must be taken to prevent water from entering the exhaust run. Rain caps, bends and other appropriate techniques can accomplish this task.

**PLEASE NOTE** THAT ON G-20 AND UP DIESEL ENGINES, A CHIMNEY TYPE EXHAUST EXTENSION MUST BE USED, AS A CUSTOMER CANNOT DIRECTLY ATTACH AN EXHAUST EXTENSION DIRECTLY TO THE EXHAUST (SHOWN ON PAGE 27). PLEASE CONTACT AIE'S APPLICATION ENGINEERING DEPARTMENT WITH ANY QUESTIONS AT 888-582-6828. **PLEASE SEE THE FOLLOWING CHART FOR BACKPRESSURE LIMITS BY ENGINE MODEL AS FOLLOWS:**

| ENGINE / GENSET MODEL | MAY EXTEND EXHAUST DIRECTLY | BACK PRESSURE LIMITS* (IN-H2O) | BACK PRESSURE LIMITS* (MMHG) |
|---|---|---|---|
| D1005 (G-9) | YES | 28.4 | 53.0 |
| D1105 (G-10) | YES | 28.4 | 53.0 |
| V1505 (G-13) | YES | 28.4 | 53.0 |
| D1803 (G-20 | NO – MUST USE CHIMNEY TYPE EXHAUST | | |
| V2403 (G-30) | NO – MUST USE CHIMNEY TYPE EXHAUST | | |
| WG1605 (G-20) | YES | 25.7 | 48.0 |
| WG2503 (G-30) | YES | 65.8 | 123.0 |
| WG3800 (G-50) | YES | 63.4 | 118.5 |
| JCB 430 (G-50) | YES | 32.1 | 60 |

* Back Pressure Limits measured at exhaust manifold. Total pressure must be taken into account all aftertreatment, silencers, and piping.

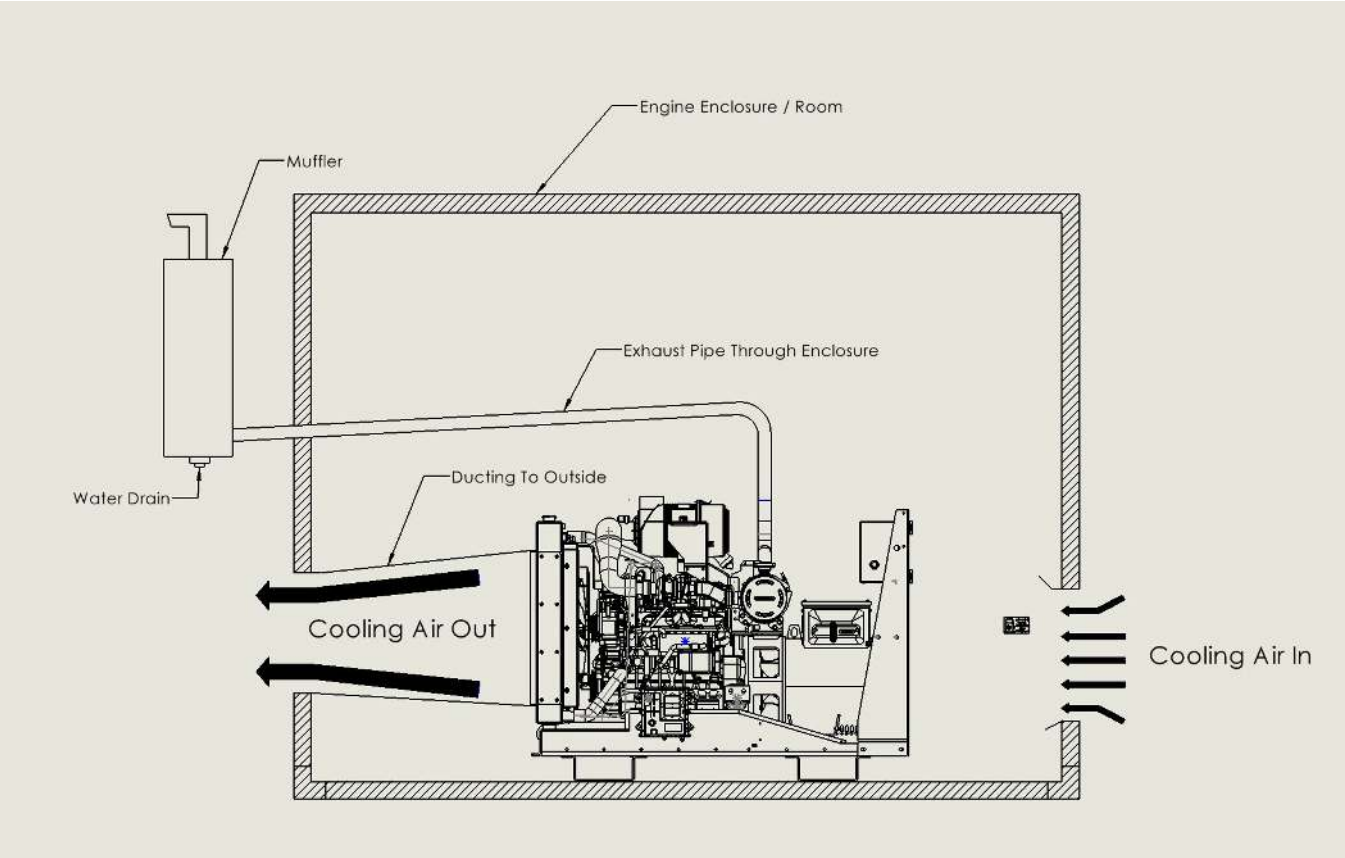


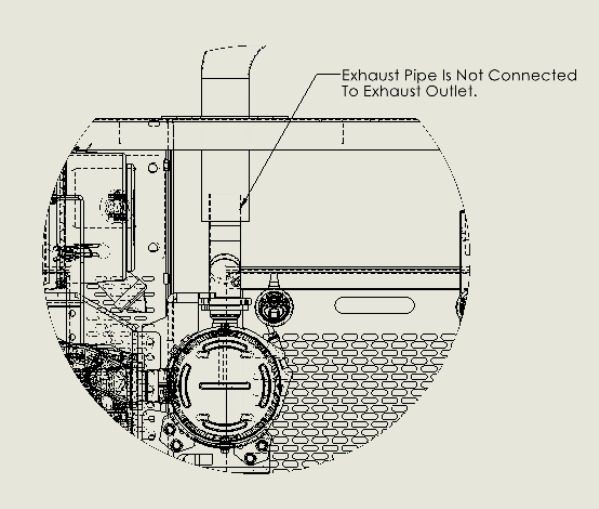


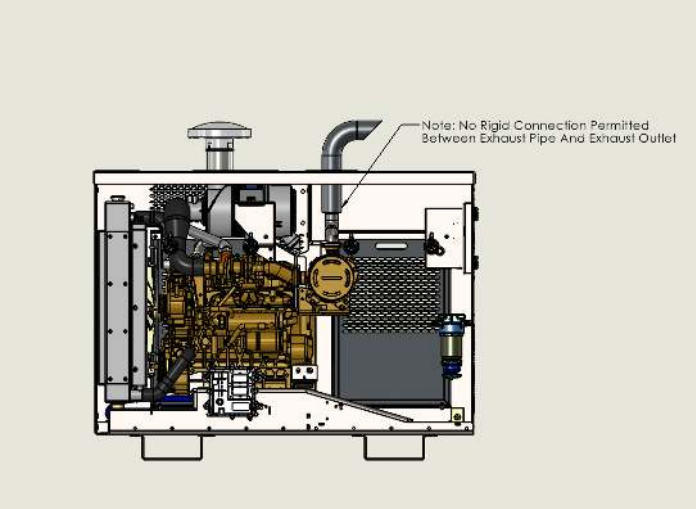

# FUEL SYSTEM

A proper fuel supply system is critical to achieving acceptable performance from an engine or generator. Always follow the appropriate standards and codes when installing the fuel system. The closer the fuel supply is to the generator installation, the easier and cheaper the fuel installation will be.

## LSI-LN ENGINE

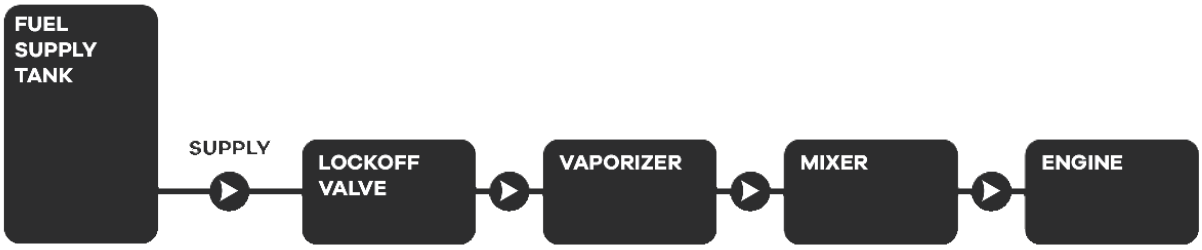


## LSI-G ENGINE

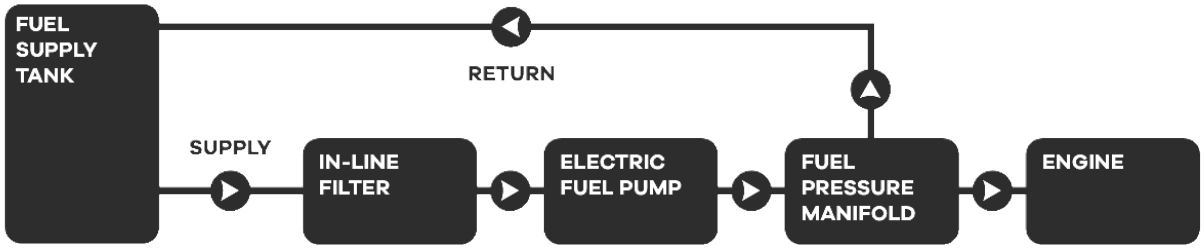


## KUBOTA COMMON RAIL DIESEL

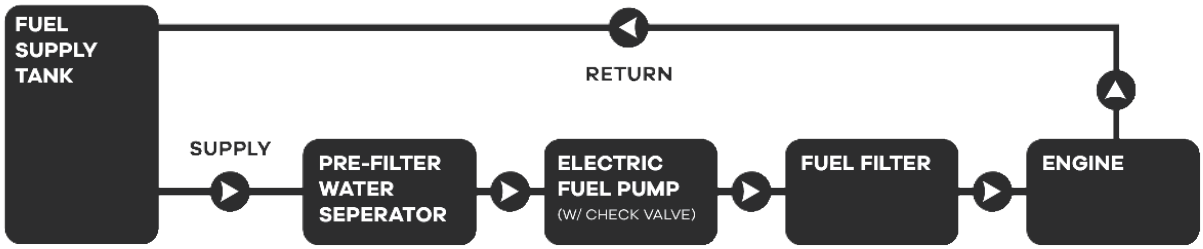






ai-engines.com
info@ai-engines.com

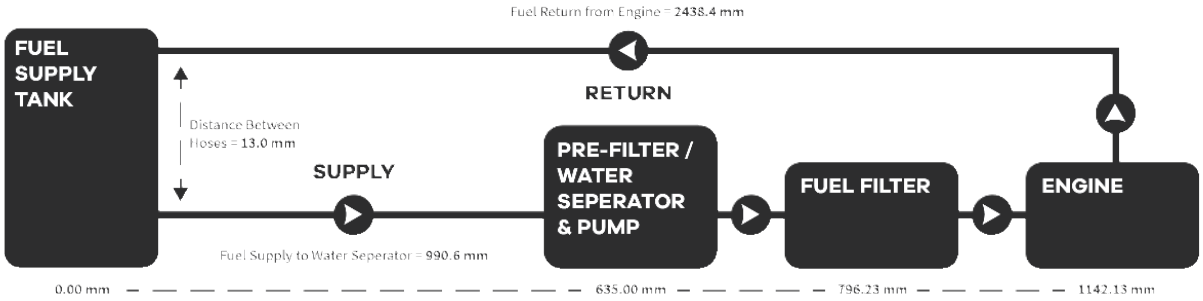


## DIESEL AND GASOLINE FUEL

G-Series generators can operate on a variety of fuel tanks. When specifying your fuel tank, the following considerations should be addressed.

1. Can I easily refill the tank?
2. How much fuel do I need?
3. In an emergency how long do I want to run my load without refilling?
4. How much fuel will my regular exercises consume?
5. How long do I want to be able to exercises the generator before I refill?

Add the exercise refill cycle to your run time and that is how many gallons of fuel you should have on hand.
The most common option for diesel is to use a UL142 sub-base tank mounted directly below the generator. If your application requires a different tank design, there are numerous options available to you from reputable manufactures. The fuel pump on the engines are generally able to pull fuel up about 36". If your tank is underground or the generator is elevated, you may need an auxiliary fuel pump for your system to work. Diesel tanks that are above the generator set may generate excessive head pressure. Consult with AIE application engineering to see if your model is compatible with above ground systems.

For gasoline systems, do not use a tank that is above the suction side of the fuel pump.





ai-engines.com
info@ai-engines.com

## GASEOUS FUELS

These systems run on LP or natural gas. In order to achieve the full output of the generator it is essential that both the specified pressure and volume is required. The flow and input pressure are available in the Engine Operator's Manual, specification sheet and the generator fuel inlet decal. Special care should be taken when installing systems that run on LP. The ambient air temperature will dramatically change the amount of fuel an LP tank can naturally vaporize. A tank sized for operation during the summer months may fail to provide adequate fuel for operation during the winter months. As the generator set gets larger it may become impractical to size an LP tank large enough for the coldest days in your area. A LP liquid-withdrawal system can be equipped on most models. These systems draw liquid rather than vapor fuel from the LP tank. Once the fuel reaches the engine it is vaporized by using the engine coolant to produce vapor fuel on demand. This upgrade is recommended for any LP system that needs to operate in cold environments. The fuel inlet will be located on the base of the generator which is vibration isolated from the engine and generator. The fuel inlet can generally be connected to the generator with rigid piping.

## ELECTRICAL CONNECTIONS / EMERGENCY STOP WIRING / BATTERY

All wiring must comply with local electrical codes. A qualified electrician must perform all electrical wiring connections. All G-Series gensets are supplied with main generator breaker where electrical connections can be made. Please note that the G-Series family of gensets come in single and three phase configurations at various voltages. Please check and ensure that the voltage and hook up sequence are correct for the intended project.

All high voltage connections should be routed appropriately from underneath the machine (through the stub up area on the tank – if so equipped) or, through a grommet on the side of the enclosure (also if so equipped). All connections are intended to be made at the main generator breaker. **Also please note that the that neutral and ground are NOT bonded. Please refer to Appendix B: AC Wiring Schematic on page 38 and 39 for further clarification.**

The battery will need to be connected before first running the genset. To do so, attach a positive battery to the red positive battery cable. Repeat for the negative battery on the black negative battery cable.

The G-Series family of gensets have an optional E-stop on open units and an E-Stop installed on the outside of enclosed units. When the Emergency Stop Button is active the control panel will display the emergency stop icon and the engine will not be allowed to crank or run under any circumstances.

### FIGURE 8: E-STOP ICONS

Emergency Stop Icon

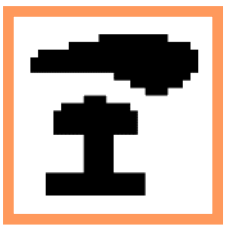

# AUTO MODE REMOTE START SETUP

The standard 4510, 6110, and 7310 DSE Control Panels come preset to accept a remote start input. To do this refer to the table below for the proper DSE pins to connect to operate this feature. The noted pins for each specific control panel need to be connected together while the control panel is turned on and in Auto Mode. When the wires are connected together the unit will begin its start sequence, start, and run automatically. Disconnecting these two wires will then turn the unit off.

| DSE TERMINAL | 4510 | 6110 | 7310 |
|---|---|---|---|
| GROUND PIN | 1 | 1 | 1 |
| REMOTE START PIN | 14 | 42 | 48 |

Wires should be routed appropriately, staying away from sharp edges or moving parts and safely routed outside of the genset. These connections are part of the 12VDC ground so no voltage will be passed through whatever switching device is used to make this connection remotely. 18 gauge, 2 conductor cable is sufficient for most installations.

The DSE control panels will be powered on while in Auto Mode and waiting for a Run command. After being put into Auto Mode the control panel will go into a Standby Mode drawing a small amount of current. Later the unit will go into a Sleep Mode with even lower current draw. The DSE 4510 will later go into a Deep Sleep Mode drawing even less current while waiting for the Run command. Reference the table below for the timer and amperage amount for each state.

| | STANDBY MODE | SLEEP MODE | DEEP SLEEP MODE | | |
|---|---|---|---|---|---|
| CONTROL PANEL | AMPERAGE | AMPERAGE | TIMER (M) | AMPERAGE | TIMER (M) |
| 4510 | 51 mA | 35 mA | 30 | 10 µA | 60 |
| 6110 | 145 mA | 70 mA | 30 | -- | -- |
| 7310 | 160 mA | 100 mA | 30 | -- | -- |

## TESTING

Before finishing the commissioning of a system run the system, under load and observe the coolant temperatures from the controller. The temperature should rise steadily and then stabilize if there is sufficient cooling air. A warning alarm is set in the controller when the system is approaching the maximum allowable operating temperature. Remember that if you are not testing at the maximum ambient air temperature, the measured temperatures on hotter days will increase.

# OPERATION

**DANGER** Diesel, gasoline and vapor fuels are combustible and can cause severe personal injury or death. Do not smoke near fuel tanks or equipment. Keep all flames, sparks, or all other sources of ignition far away.

**WARNING** Exhaust gas is deadly. Never operate the genset without proper ventilation. Check for leaks in the exhaust system regularly. Exposure to exhaust gases can cause carbon monoxide poisoning. Symptoms of carbon monoxide poisoning include dizziness, throbbing in temples, nausea, muscular twitching, headache, vomiting, weakness and sleepiness and inability to think clearly. If you or anyone experiences these symptoms, get to fresh air immediately. If symptoms persist, seek medical attention.

## PRE-START CHECKS

In order to prevent problems and identify maintenance situations early, it is important to perform a pre-start check before each use of the genset. Before each start:

1. Check for oil and coolant leakage
2. Check all air inlets and outlets for obstructions or clogging
3. Check radiator fins for clogging
4. Check for signs of fuel leaks, exhaust leaks or damage to either system
5. Check belt tension
6. Check engine oil level
7. Check engine coolant level
8. Turn off any large loads.

- Check all belts, guards and panel covers are firmly secured.
- Check the installed wiring to ensure all connections are firmly installed in the correct position, and that wires are in good condition.
- Make sure the battery connections are secure and polarity of connections are correct.
- Ensure there is fuel in the fuel tank or fuel supply is in the on position.
- Check level of coolant in machine radiator, and top-up if low.
- Check hoses for damage or loose clamps.
- Check level of engine oil using dipstick.
- Where applicable, check fuel filter/water separator for presence of water or contaminants.
- Visually inspect the engine and alternator for any signs of damage, water, oil or fuel leaks.
- Always ensure the machine intake and outlet air vents and grills are not obstructed or blocked in any way to allow good air-flow
- through the machine.
- Check the engine intake air filter is correctly fitted, and that there are no obstructions to the incoming air.
- Make sure the alternator windings and assembly are not damp, or dirty. Failure to do so could result in damage to the alternator windings.
- Turn off all large loads connected to the generator or turn off the main breaker. Starting the generator with loads attached can prevent the generator from starting and damage the starter motor.
- The genset can be started directly from the control panel (manual). The control panel has several different modes of operation, for a complete list, please refer to section of this manual 'OPERATOR INTERFACE' or the specific DSE Control Panel Operation Manual supplied with the genset.

## FIGURE 11: RECOMMENDED WARM UP TIMES

| AMBIENT TEMPERATURE | WARM-UP TIME REQUIREMENT |
|---|---|
| ABOVE 0° C (32° F) | AT LEAST 5 MINUTES |
| 0° C (32° F) TO -10° C (14° F) | 10 MINUTES |
| BELOW -10° C (14° F) | MORE THAN 10 MINUTES |





ai-engines.com
info@ai-engines.com

## OPERATING AT HIGH ALTITUDES

The maximum output power available decreases as altitude increases due to a drop in air density. For every 1,000 foot increase in elevation, you can expect power output to drop by approximately 3%. For all specifications published, please assume an elevation of 0 feet (sea level).

## OPERATING IN HOT AMBIENT TEMPERATURES

The G-Series family of gensets are rated for operation at full published power to 120°F. When operating in high temperature ambient conditions, it is especially important to ensure proper air flow to the genset. In addition, engine oil with the proper viscosity must be used, see Figure 4 on page 17 for proper oil recommendations.

## OPERATING IN COLD AMBIENT TEMPERATURES

When operating in low temperature ambient conditions (under 20 degrees F), be sure to use the correct engine oil viscosity, see Figure 4 on page 17. When starting in cold weather, it may be necessary to allow the engine to complete more than one pre-heat and crank cycle to start. Once started, allow the engine to run and warm per the above table. A block or coolant hose heater might have been supplied with your unit which should be connected and used prior to running in these types of low temperature conditions.

## BREAKING IN A NEW ENGINE

Every new engine goes through a break in period. During which mechanical components settle into the stable conditions that they will operate under after the break in period is complete. Correctly breaking in an engine is important for top engine performance and correct oil and fuel consumption.

The break in period lasts at least four hours. In order to break in your genset:

1. Change engine oil and oil filter cartridge after the first 50 hours of operation.
2. Do NOT use synthetic oil during the break in period. (See ENGINE OIL RECOMMENDATIONS on page 16)
3. Operate the genset at approximately ½ load for at least two hours and then ¾ load for at least 2 more hours.
4. Check oil level at least once a day.

## EXERCISING THE GENSET

***IF THE GENSET IS USED FOR BACKUP POWER OR STANDBY POWER FOR A RESIDENCE OR COMMERCIAL BUILDING WHERE IT IS NOT APPROPRIATE TO PLACE IN LONG TERM STORAGE, THE GENSET SHOULD BE RUN PERIODICALLY. RUN THE GENSET EVERY 30 DAYS AT 50% LOAD FOR 30 MINUTES TO KEEP THE ENGINE AND GENERATOR IN PROPER WORKING ORDER. THIS WILL ENSURE THE GENSET IS READY TO DELIVER POWER WHEN NEEDED.***

## TRANSPORTATION, STORAGE, AND RETURNING TO SERVICE

**⚠ WARNING**

- Secure the genset to prevent movement during operation.
- To not stand near or under the genset while it is suspended.
- The genset is heavy; use only equipment capable of handling such loads.
- When transporting the genset, remove the black negative (-) battery cable from the battery, disconnect and cap fuel supply and return lines, and keep the genset level.

To transport the generator, use only suitable equipment such as a crane or fork lift. For approximate generator weight, refer to the SPECIFICATIONS on page 9. If the genset cannot be used regularly or will be idle for more than 4 months, use to the following procedure to prepare the unit for storage.

1. Disconnect any electrical loads.
2. Turn off the main circuit breaker.
3. Disconnect the fuel supply and return lines. Cap inlet and outlet fuel ports.
4. Disconnect the wires to the electric fuel pump.
5. Turn the On/Off/Fuel Prime switch to the OFF position.
6. Change engine oil. Make note of oil viscosity used.
7. Disconnect the battery cables, beginning with the Negative (-) cable.
8. Secure the battery cables to prevent inadvertent shorting to the battery terminals. Remove the battery from the genset and store in a dry and dark place.
9. Plug the exhaust pipe to prevent ingress of dirt, moisture, and rodents.
10. Store in a flat, dry place away from flammable materials.

To return the generator to service, use the following procedure:

1. Verify that oil used to store the unit is appropriate for its new use. If necessary, replace with correct engine oil. See ENGINE OIL RECOMMENDATIONS on page 16.
2. Re-install and reconnect the battery, starting with the positive (+) battery cable.
3. Remove plug from exhaust pipe. Inspect for debris, remove if necessary.
4. Reconnect the fuel supply and return lines.
5. Reconnect the wires to the electric fuel pump.
6. Reconnect electrical loads.
7. Turn on main breaker.
8. Perform a pre-start check, see PRE-START CHECKS on page 29.

# MAINTENANCE

Periodic maintenance is the single most important factor for genset life and performance. If you are operating in exceptionally hot or dusty environments, more frequent service may be required. Please refer to the supplied Kubota or JCB Engine Operations Manual for maintenance procedures for your specific engine model as follows:

| G- Series Model | Engine Make | Engine Model |
|---|---|---|
| | | |
| G-9 – Diesel | Kubota | D1005 |
| G-10 – Diesel | Kubota | D1105 |
| G-13 – Diesel | Kubota | V1505 |
| G-20 – Diesel | Kubota | D1803 |
| G-20 – LPG | Kubota | WG1605 |
| G-20 – NG | Kubota | WG1606 |
| G-20 – Gasoline | Kubota | WG1607 |
| G-30 – Diesel | Kubota | V2403 |
| G-30 – LPG | Kubota | WG2503 |
| G-30 – NG | Kubota | WG2503 |
| G-30 – Gasoline | Kubota | WG2503 |
| G-50 – Diesel | JCB | 430 |
| G-50 – LPG | Kubota | WG3800 |
| G-50 – Natural Gas | Kubota | WG3800 |

**CAUTION** Always perform checks in the STOP condition, except checks that require the generator to be running. Keep hands and loose clothing away from rotating parts at all times during operation. Hot engine parts can cause severe burns. Allow the engine to cool before performing any checks.

If you are experiencing trouble with your genset, use the tables below to try and resolve your issue. If you are still experiencing problems, contact AIE's Service Department at 1-888-737-8375.

The Deep Sea controller is capable of providing valuable diagnostic information in the event of an unexpected genset shutdown. When the controller identifies a shutdown condition, it will stop the genset, light the warning light (exclamation point light) and display information on the controller screen.

The digital inputs and outputs on the Deep Sea controller are all programmable. All documentation references to the default programming. For modifications to the programming, please refer to the Deep Sea Electronic Controller manual provided with the generator.

For help troubleshooting abnormal genset behavior, please consult the engine troubleshooting tables and controller 'shut down' icon explanation below.

# ENGINE TROUBLESHOOTING

| SYMPTOM | POSSIBLE CAUSE | SOLUTION |
|---|---|---|
| Low cranking speed | Bad battery connection | Clean and tighten positive and negative battery cable connections on battery and at genset. |
| | Low Battery Voltage | Recharge or replace battery. |
| | Engine oil viscosity too high | Replace engine oil with D5W40 or D10W40 for cold weather. |
| | Parasitic load during cranking | Disconnect all electrical loads during cranking. |
| Engine cranks but does not start. Control panel displaying FAIL TO START after 3 crank attempts. | Fuel shortage | Refill fuel tank |
| | Air or water in fuel system | 1) Check all fuel connections for loose or damaged fasteners. Replace if necessary.<br>2) Bleed air from fuel lines<br>3) Remove water from fuel tank |
| | Fuel restriction | 1) Check fuel filter. Replace if dirty<br>2) Check fuel tank. Remove settled impurities or moisture. |
| | Loose injection line | Tighten injector line |
| | Air restriction | Check engine air filter. Replace if necessary. |
| Engine stops unexpectedly | Fuel shortage | Refill fuel tank |
| | Air or water in fuel system | 1) Check all fuel connections for loose or damaged fasteners. Replace if necessary.<br>2) Bleed air from fuel lines<br>3) Remove water from fuel tank |
| | Fuel restriction | 1) Check fuel filter. Replace if dirty.<br>2) Check fuel tank. Remove settled impurities or moisture. |
| | Air restriction | Replace air cleaner element. |
| Starter engages and disengages | Low battery voltage | Recharge or replace battery. |
| | Bad battery connection | Clean and tighten positive and negative battery cable connections on battery and at genset. |

Shutdown Alarms are latching alarms and to remove the fault, press the ***Stop/Reset Mode*** button on the module.

| Icon | Text | Fault | Description |
|---|---|---|---|
| | Dig. Input A | **Auxiliary Inputs** | The module detects that an auxiliary input which has been user configured to create a fault condition has become active. |
| | Ana. Input A | **Analogue Input Configured As Digital** | The analogue inputs can be configured to digital inputs. The module detects that an input configured to create a fault condition has become active. |
| | Ana. Input A High | **Analogue Input High** | The module detects that an analogue input has risen above the high alarm setting level. |
| | Ana. Input A Low | **Analogue Input Low** | The module detects that an analogue input has fallen below the low alarm setting level. |
| | Ana. Input A O.C. | **Analogue Input Open Circuit** | The analogue input has been detected as being open circuit. |
| | Fail to Start | **Fail To Start** | The engine has failed to start after the configured number of start attempts |
| | Low Oil Pres. | **Low Oil Pressure** | The module detects that the engine oil pressure has fallen below the low oil pressure pre-alarm setting level after the Safety On timer has expired. |
| | High Eng. Temp. | **Engine High Temperature** | The module detects that the engine coolant temperature has exceeded the high engine temperature pre-alarm setting level after the Safety On timer has expired. |
| | Und. Spd. | **Under Speed** | The engine speed has fallen below the under speed pre alarm setting |
| | Over Spd. | **Over Speed** | The engine speed has risen above the over speed pre alarm setting |
| | Chrg. Alt. Fail | **Charge Failure** | The auxiliary charge alternator voltage is low as measured from the W/L terminal. |
| | Fan Spd. Low | **Fan Speed Low** | The module detected that the cooling fan speed is too low. |

| Icon | Text | Fault | Description |
|---|---|---|---|
| | Water In Fuel | **Water In Fuel** | The module or engine ECU has detected there is water in the fuel. |
| | | **Fuel Usage Alarm** | The module has detected that the fuel consumption is higher than expected. |
| | DPF | **DPTC Filter** | The engine ECU has detected that the DPF regen is required. Contact the engine manufacturer for further details. |
| | DEF Low | **DEF Level** | The engine ECU has detected that the DEF level is low. |
| | SCR Ind. | **SCR Inducement** | The engine ECU has detected that there is a fault with the SCR system. Contact the engine manufacturer for further details. |
| | Bund Level High | **Tank Bund Level High** | The module has detected that the fuel has leaked in the bund of the fuel tank. |



ai-engines.com
info@ai-engines.com

| Icon | Text | Fault | Description |
|---|---|---|---|
|  | Low Fuel | Low Fuel Level | The level detected by the fuel level sensor is below the low fuel level pre-set alarm setting. |
|  | High Fuel | High Fuel Level | The level detected by the fuel level sensor is above the high fuel level pre-set alarm setting. |
|  | Gen. Und. Volt. | Generator Under Voltage | The generator output voltage has fallen below the pre-set alarm setting after the Safety On timer has expired. |
|  | Gen. Over Volt. | Generator Over Voltage | The generator output voltage has risen above the pre-set alarm setting. |
|  | Gen. Und. Freq. | Generator Under Frequency | The generator output frequency has fallen below the pre-set alarm setting after the Safety On timer has expired. |
|  | Gen. Over Freq. | Generator Over Frequency | The generator output frequency has risen above the pre-set alarm setting. |
|  | Del O.C. | Delayed Over Current | The measured current has risen above the configured trip level for a configured duration. |
|  | kW Overl. | kW Overload | The measured kW has risen above the configured trip level for a configured duration. |
|  | CAN ECU Fault | CAN ECU Fault | The engine ECU has detected an alarm – CHECK ENGINE LIGHT<br>Contact Engine Manufacturer for support. |
|  | CAN Data Fail | CAN Data Fail | The module is configured for CAN operation and does not detect data on the engine Can data link. |
|  | E. Stop | Emergency Stop | The emergency stop button has been pressed. This is normally a failsafe (normally closed to emergency stop) input and immediately stops the set should the signal be removed. |
|  | Oil Sense O.C. | Oil Sensor Open Circuit | The oil pressure sensor has been detected as being open circuit. |
|  | Cool Sense O.C. | Coolant Temperature Sensor Open Circuit | The coolant temperature sensor has been detected as being open circuit. |
|  | | Coolant Level Sensor Open Circuit | The coolant level sensor has been detected as being open circuit. |
|  | | Coolant Level Alarm | The coolant level has been detected as low. |
|  | Oil Filter Maint. | Oil Filter Maintenance Alarm | Maintenance due for oil filter. |
|  | Air Filter Maint. | Air Filter Maintenance Alarm | Maintenance due for air filter |
|  | Fuel Filter Maint. | Fuel Filter Maintenance Alarm | Maintenance due for fuel filter. |



ai-engines.com
info@ai-engines.com

# SUPPORTING DOCUMENTS

Need to dive deeper? For in-depth support and documentation, visit *gsupport.ai-engines.com* or scan the QR code below.

Supporting documents include:

- DEEP SEA OPERATORS MANUAL AND INSTALL GUIDE
- MECC ALTE SERIES ECP OPERATORS MANUAL AND SPECIFICATION SHEETS
- MECC ALTE DSR AND DER1 DIGITAL REGULATOR SPECIFICATION SHEETS
- APPENDIX A: AC WIRING SCHEMATIC
- AIE WARRANTY STATEMENT
- KUBOTA WARRANTY STATEMENT
- JCB WARRANTY STATEMENT

*https://www.gsupport.ai-engines.com*

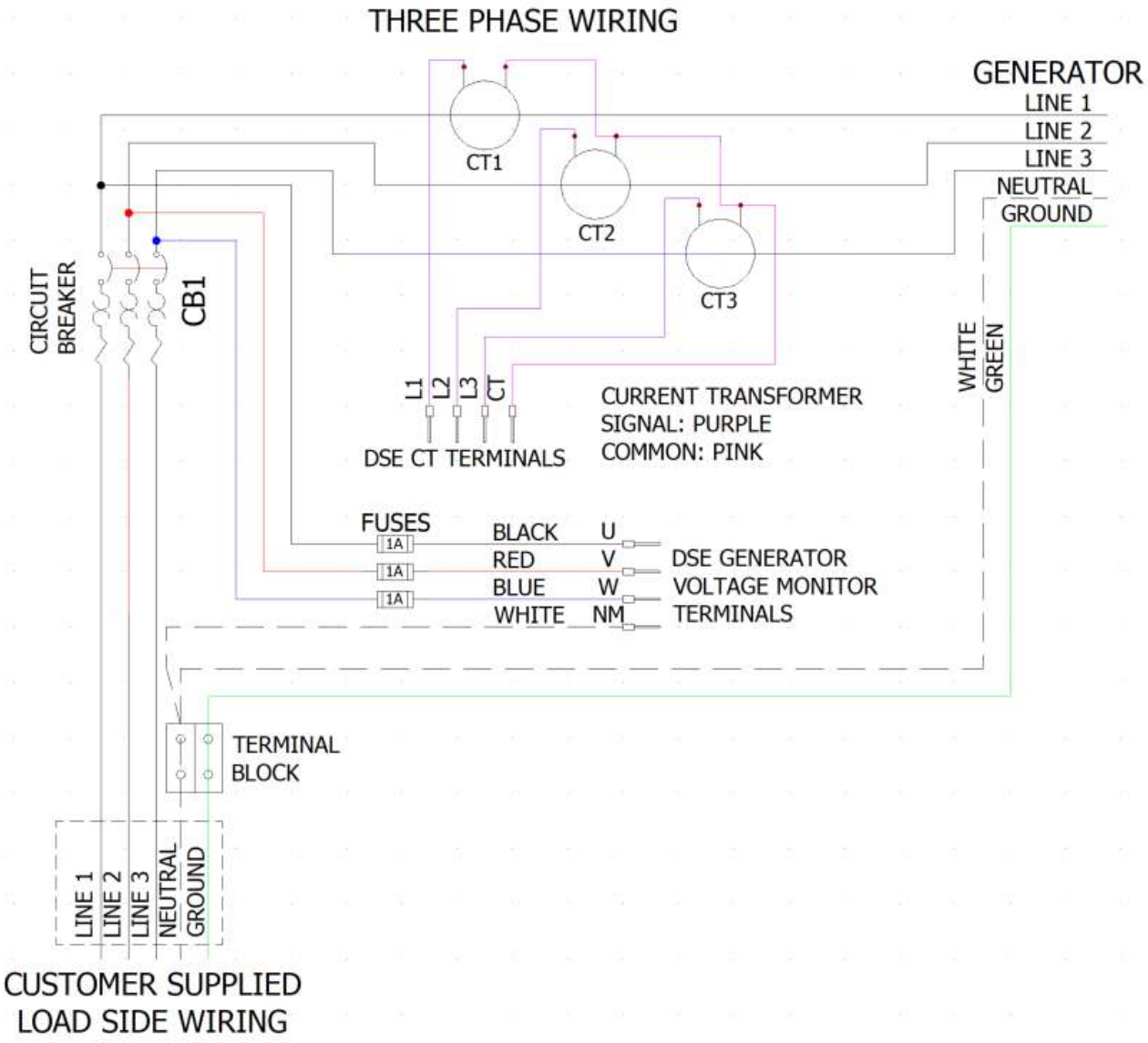






ai-engines.com
info@ai-engines.com

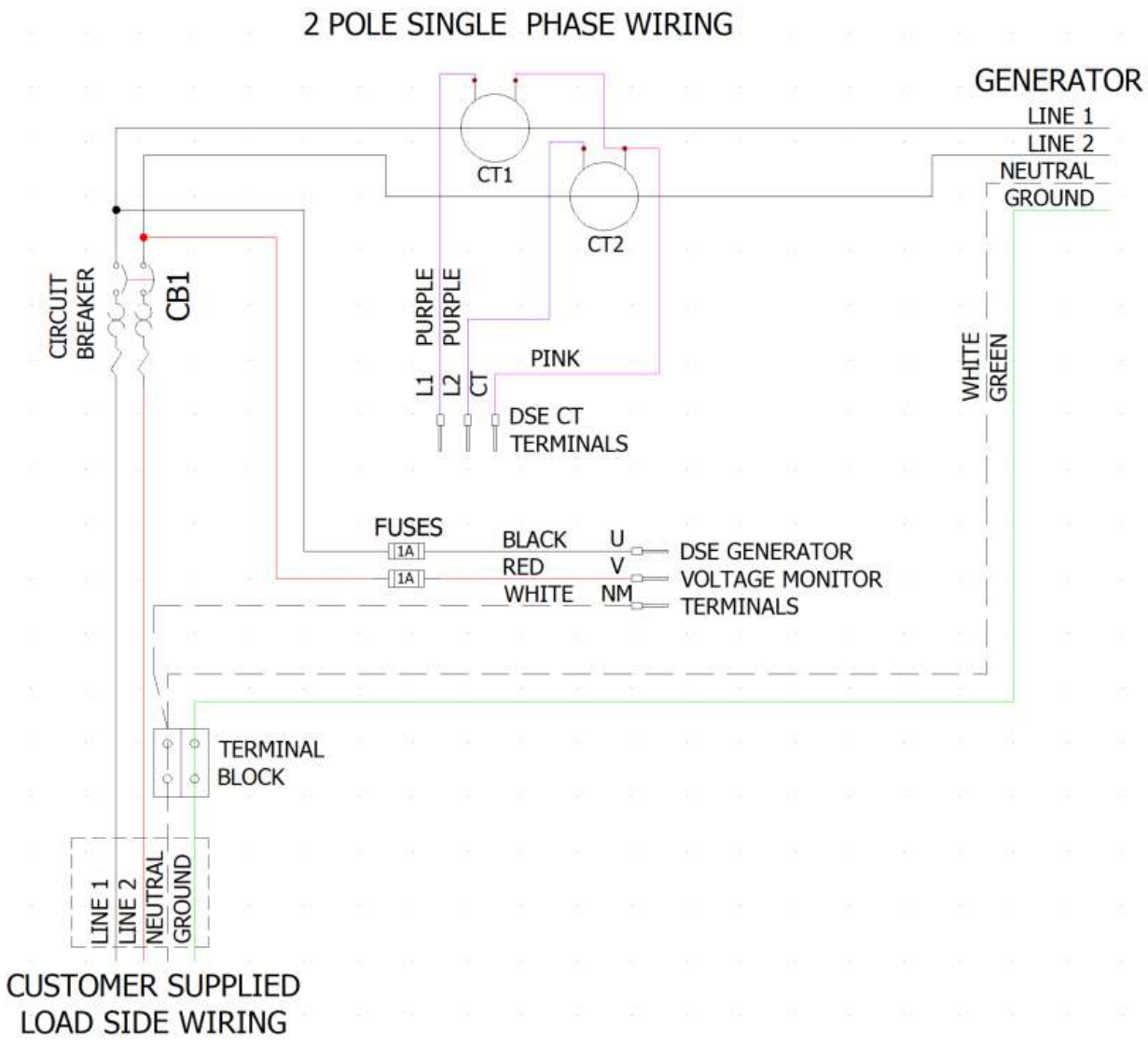


SUPPORTING DOCUMENTS

# AIE EMISSIONS COMPLIANCE 'HOLD HARMLESS' AGREEMENT

Anderson Industrial Engine (AIE) is not responsible for emissions control requirements, or any permitting requirements, related to G-Series generators purchased. The customer agrees to accept full responsibility for demonstrating and maintaining compliance with all applicable regulations, whether specifically referenced or not.

The provided installation instructions are intended to give the installer of the unit all the information that is necessary to properly install the genset and related components in the installation. Failure to follow these instructions when installing a certified engine in a piece of non-road equipment may violate federal regulations (40 CFR 1068.105(b)) and could result in fines or other penalties as described in the Clean Air Act. Not meeting the manufacturer's emission-related installation instructions may be a violation of one or more of the prohibitions of §1068.101, and EPA may assess a civil penalty up to $44,539 for each engine or piece of equipment in violation. Additional violations and penalties may be levied by State and Local air quality regulatory agencies as appropriate.

G-Series generators will be shipped from AIE in a 'Certified State' with all emissions control devices (air cleaners, aftertreatment devices, etc.) installed on the engine. In the rare instance when engines are not shipped in a 'Certified State', an 'End User Delegated Assembly' contract will be required to be established with the final engine assembler. Please reference 40 CFR 1068.261 for additional information.

Tampering. You may not remove or render inoperative prior to the sale and delivery to the ultimate purchaser any device or element of design installed on or in engines/equipment in compliance with the regulations. You also may not knowingly remove or render inoperative any such device or element of design after sale and delivery to the ultimate purchaser. This includes, for example, operating an engine without a supply of appropriate quality urea if the emissions control system relies on urea to reduce NOx emissions or the use of incorrect fuel or engine oil that renders the emissions control systems inoperative.